EXHIBIT D

LIVERMORE MUNICIPAL AIRPORT

Airport Land Use Compatibility Plan

Prepared for
Alameda County ALUC

August 2012

ESA

Livermore Municipal Airport

Airport Land Use Compatibility Plan

Prepared for
Alameda County ALUC

August 2012

2600 Capitol Avenue
Suite 200
Sacramento, CA 95816
916.564.4500
www.esassoc.com

Los Angeles

Oakland

Olympia

Petaluma

Portland

San Diego

San Francisco

Seattle

Tampa

Woodland Hills

202229

TABLE OF CONTENTS

Livermore Municipal Airport
Draft Land Use Compatibility Plan

		Page
1.	**Introduction**	**1-1**
1.1	Plan Overview	1-1
	1.1.1 Function and Applicability of the Plan	1-1
	1.1.2 Statutory Requirements	1-2
	1.1.3 Alameda County Airport Land Use Commission	1-4
	1.1.4 Relationship of the ALUC to County and City Governments	1-4
1.2	Policy Framework	1-5
	1.2.1 State Laws and Guidelines	1-5
	1.2.2 Relationship to Other Planning Documents	1-6
1.3	Plan Implementation	1-6
	1.3.1 General Plan Consistency	1-6
	1.3.2 Project Referrals	1-7
1.4	Plan Contents	1-7
2.	**County-wide Policies**	**2-1**
2.1	Introduction	2-1
2.2	ALUCP Lifecycle	2-1
2.3	Effective Date	2-2
2.4	Definitions	2-2
2.5	Geographic Scope	2-4
	2.5.1 Airport Influence Area	2-4
	2.5.2 County-wide Impacts on Flight Safety	2-4
	2.5.3 New Airports	2-4
	2.5.4 Heliports and Helipads	2-5
2.6	Scope of ALUC Review	2-6
	2.6.1 Actions Requiring ALUC Review	2-6
	2.6.1.1 Land Use Plans and Zoning Ordinances	2-6
	2.6.1.2 Airport and Heliport Plans	2-7
	2.6.2 Land Use Actions Recommended for ALUC Review	2-8

Page

2.7 Review Process 2-9
2.7.1 General 2-9
2.7.2 Public Noticing 2-9
2.7.3 Review Process for Land Use Plans and Zoning Ordinances 2-9
2.7.3.1 Initial Review of General Plan Consistency 2-9
2.7.3.2 ALUC Administrative Officer Choices 2-10
2.7.3.3 ALUC Action Alternatives 2-10
2.7.3.4 Response Time 2-10
2.7.3.5 Review Criteria 2-11
2.7.4 Review Process for Airport and Heliport Actions 2-12
2.7.4.1 Project Submittal Information 2-12
2.7.4.2 ALUC Action Alternatives for Reviews of New Airports and Heliports 2-12
2.7.4.3 ALUC Action Choices for Plans of Existing Airports or Heliports 2-13
2.7.4.4 Response Time 2-13
2.7.4.5 Review Criteria for New Airports or Heliports 2-13
2.7.4.6 Review Criteria for Master or Development Plans 2-14
2.7.4.7 Consistency Determination Criteria for master or Development Plans 2-14
2.7.5 Review Process for Proposed Land Use Actions 2-14
2.7.5.1 Information Required for Review of Proposed Individual Project 2-14
2.7.5.2 ALUC Administrative Officer's Alternatives 2-16
2.7.5.3 ALUC Action Choices 2-16
2.7.5.4 Response Time 2-17
2.7.5.5 Subsequent Review 2-17
2.7.5.6 Basic Land Use Compatibility Criteria 2-17
2.7.5.7 Special Conditions 2-20

3. Livermore Municipal Airport Policies 3-1
3.1 Purpose and Scope 3-1
3.1.1 Airport Influence Area (AIA) 3-1
3.1.2 Airport Protection Area 3-3

3.2 Compatibility Factors and Zones 3-3
3.2.1 Noise Impact Zones 3-3
3.2.2 Safety Zones 3-3
3.2.3 FAR Part 77 Surfaces (Airspace Protection) 3-4
3.2.4 Overflight Zones 3-4

3.3 Compatibility Policies 3-4
3.3.1 Noise 3-4
3.3.1.1 Objective 3-4
3.3.1.2 Evaluation 3-4
3.3.1.3 Measurement 3-4
3.3.1.4 Factors Determining Noise Criteria 3-5
3.3.1.5 Appropriate Noise Levels for Specific Types of Land Use Development 3-5
3.3.1.6 Interior Noise Levels 3-5
3.3.1.7 Engine Run-up and Testing Noise 3-6

Page

3.3.2 Safety 3-8
3.3.2.1 Objective 3-8
3.3.2.2 Evaluation 3-8
3.3.2.3 Measurement 3-8
3.3.2.4 Factors Determining Safety Criteria 3-8
3.3.2.5 Airport Safety Zones 3-9
3.3.2.6 Airport Protection Area (APA) 3-10
3.3.2.7 Residential Development Criteria 3-10
3.3.2.8 Nonresidential Development Criteria 3-11
3.3.2.9 Land Uses of Particular Concern 3-12
3.3.2.10 Mixed-Use Development 3-13
3.3.2.11 Criteria for Clustering Development 3-14
3.3.2.12 Open Land 3-14
3.3.3 Airspace Protection 3-18
3.3.3.1 Objective 3-18
3.3.3.2 Evaluation 3-18
3.3.3.3 Measurement 3-18
3.3.3.4 Factors Determining Airspace Protection Criteria 3-18
3.3.3.5 FAA Notification 3-18
3.3.3.6 Obstruction Marking and Lighting 3-19
3.3.3.7 Other Flight Hazards 3-19
3.3.3.8 Avigation Easement Dedication 3-20
3.3.4 Overflight 3-20
3.3.4.1 Objective 3-20
3.3.4.2 Evaluation 3-20
3.3.4.3 Measurement 3-21
3.3.4.4 Factors Determining Overflight Criteria 3-21
3.3.4.5 Overflight Notification 3-21
3.3.4.6 Buyer Awareness Measures 3-21

4. Livermore Municipal Airport and Vicinity Data 4-1
4.1 Introduction 4-1

4.2 Surrounding Airport Environs 4-1
4.2.1 Jurisdictions 4-1
4.2.2 City of Livermore and Surrounding Land Uses 4-1
4.2.3 Alameda County Land Uses 4-2
4.2.4 Noise-Sensitive Land Uses 4-2
4.2.5 Future Airport Vicinity Land Uses 4-3

4.3 Land Use Planning and Regulations 4-3
4.3.1 City of Livermore General Plan 4-3
4.3.1.1 City of Livermore Noise Element Policies 4-11
4.3.1.2 City of Livermore El Charro Specific Plan 4-11
4.3.2 Pleasanton General Plan 2005-2025 4-12
4.3.2.1 Stoneridge Drive Specific Plan 4-13
4.3.2.2 Stoneridge Drive Specific Plan Amendment/Staples Ranch 4-14
4.3.3 City of Dublin General Plan 4-14
4.3.4 Each County Area Plan 4-15

Page

4.4 Existing Airport Land Uses 4-15
4.4.1 Airside Land Uses/Facilities 4-15
4.4.2 Landside Land Uses 4-15
4.4.3 Runways 4-16
4.4.4 Taxiways 4-16
4.4.5 Typical Flight Procedures 4-16
4.4.6 Noise Abatement Procedures 4-21

4.5 Airport Planning Documents 4-21
4.5.1 Airport Protection Area 4-21
4.5.2 Livermore Municipal Airport General Plan Amendment and Rezoning 4-21

4.6 Existing and Future Airport Activity 4-22
4.6.1 Fleet Mix 4-22
4.6.2 Operations 4-22

5. References 5-1

Appendices

A. California Airport Land Use Commission Laws - Public Utility Code Section 21670
B. Airport Land Use Compatibility Concepts
C. FAA Airspace Protection Guidance
D. Methods for Determining Concentrations of People
E. Sample Implementation Documents
F. Consistency Checklist
G. Heliport Design
H. Airport Protection Area
I. Glossary
J. Real Estate Disclosure Law and Legislation

List of Figures

1-1 Alameda County Airports 1-3
3-1 Airport Influence Area 3-2
3-2 Noise Compatibility Zones 3-23
3-3 Safety Compatibility Zones 3-25
3-4 FAR Part 77 Surfaces 3-27
3-5 Overflight Compatibility Zones 3-29
4-1 General Plan Land Use Designations in the Vicinity of Livermore Municipal Airport 4-4
4-2 Generalized Zoning in the Vicinity of Livermore Municipal Airport 4-8
4-3a Airport Layout Plan 4-17
4-3b Airport Layout Plan 4-19

Page

List of Tables

2-1	Heliports in Alameda County	2-5
2-2	Information Required for ALUC Review of Proposed Land Use Actions	2-15
2-3	Basic Compatibility Criteria for Airports in Urban and Rural/Suburban Areas	2-18
3-1	Noise Compatibility Criteria	3-7
3-2	Safety Compatibility Criteria	3-15
4-1	Existing and Forecast Based Fleet Mix	4-18
4-2	Existing and Projected Annual Aircraft Operations	4-18

This page left intentionally blank.

CHAPTER 1
Introduction

1.1 Plan Overview

The State Aeronautics Act (Public Utilities Code, Section 21670 *et seq.*) requires the preparation of an airport land use compatibility plan (ALUCP) for nearly all public-use airports in the state (Section 21675). The intent of the ALUCP is to encourage compatibility between airports and the various land uses that surround them. Alameda County (the County) has established an airport land use commission (ALUC), in accordance with state law, to prepare land use compatibility plans for all public-use airports in the County and to review general plans, proposed changes to zoning codes and ordinances, land use actions and development projects, and airport development plans for consistency with compatibility policies.

1.1.1 Function and Applicability of the Plan

The *Livermore Municipal Airport Land Use Compatibility Plan* is the primary document used by the Alameda County ALUC to help promote compatibility between Livermore Municipal Airport (LVK) and its environs. More specifically, this ALUCP should act as a guide for the ALUC and local jurisdictions in safeguarding the general welfare of the public as LVK and the area surrounding the Airport grows. This document shall also serve as a tool for the Alameda County ALUC in fulfilling its duty to review airport and land use development proposals within the airport influence area (AIA) or referral area associated with the airport.

The compatibility criteria set forth in this document shall be used by local agencies to prepare and amend land use plans and ordinances. California State law dictates that the County and affected cities modify their general and specific plans to be consistent with the ALUC's plan, or to take steps to overrule the ALUC. The AIA for LVK includes portions of the cities of Livermore, Pleasanton and Dublin, and unincorporated areas of the County; as such, this document is applicable to all three cities and Alameda County as they prepare land use plans and review development proposals within the AIA. This document also applies to any future area that may be incorporated within any part of the AIA, as well to school districts, community college districts, and special districts, whenever these entities consider the development of new facilities or expansion of existing ones. Finally, this document should also be considered by land owners when proposing projects within the AIA.

This document replaces the *Alameda County Airport Land Use Policy Plan (ALUPP)*, which the ALUC adopted in 1986. Alameda County includes three public use airports: LVK, Hayward Executive Airport (HWD), and Oakland International Airport (OAK). This compatibility plan addresses only the AIA associated with LVK. Separate compatibility plans have been prepared for OAK and HWD (see Figure 1-1 for airport locations). This ALUCP is based on the approved Airport Layout Plan (ALP) for Livermore Municipal Airport, which was revised in 2007 and approved by FAA in 2008. This ALUCP also reflects the land use compatibility planning guidance set forth in the *California Airport Land Use Planning Handbook,* which was published by the California Department of Transportation's (Caltrans) Division of Aeronautics (Caltrans, 2002).

1.1.2 Statutory Requirements

Powers and Duties

ALUCs are established pursuant to the State ALUC law[1] to protect the public health, safety, and welfare by promoting the orderly expansion of airports and adoption of land use measures by local public agencies to minimize exposure to excessive noise and safety hazards near airports. In accordance with Section 21674(b) of the California Public Utilities Code, an ALUC has the authority "to coordinate planning at the state, regional and local levels so as to provide for the orderly development of air transportation, while at the same time protecting the public health, safety, and welfare"; to prepare and adopt airport land use plans; and to review and make recommendations concerning specified plans, regulations and other actions of local agencies and airport operators. In addition, ALUCs review plans for proposed new airports or heliports.

Limitations

State law does not authorize ALUCs to zone property or apply other land use controls normally exercised by local public agencies. Because the jurisdiction of the ALUC is limited to new land uses, existing land uses that are in conflict with or affected by existing or anticipated airport operations are not subject to the policies established by the ALUC. However, existing incompatible uses are the concern of the airport and of the city or county having jurisdiction over the affected area, and policies should be developed to address this problem. The term "existing land uses" is further defined in Chapter 2.

State law does not provide ALUCs with jurisdiction over airport operations, although the ALUCP must include assumptions about future operations at each airport. Once adopted, the ALUCP serves as a framework for reviewing significant proposals for further airport development.

[1] The State ALUC law is contained in Public Utilities Code Article 3.5, State Aeronautics Act, Section 21661.5, Section 21670 *et seq*., and Government Code Section 65302.3 et seq. (see Appendix B).

SOURCE: DeLorme Street Atlas USA, 2000; and ESA, 2007

Livermore Municipal Airport Land Use Compatibility Plan . 202229

Figure 1-1
Alameda County Airports

ALUC jurisdiction and ALUCP scope are confined to land use-related primary impacts on the area surrounding the airport. This excludes the ALUC from considering air quality impacts of the airport, and other “secondary” impacts such as traffic or air quality impacts caused by airport operations.

1.1.3 Alameda County Airport Land Use Commission

The seven-member Alameda County ALUC was created in 1971. After approving interim plans in the early 1970s, the ALUC adopted the in 1977. The ALUPP was amended in 1979. The 1979 ALUPP was in use until a new ALUPP was adopted in 1986. This ALUCP replaces the ALUPP adopted by the ALUC in 1986.

Section 21675(a) of the California Public Utilities Code (PUC) states that the ALUC shall review land use compatibility plans as often as necessary in order to accomplish its purposes, but shall not be amend those plans more than once in any calendar year.

The ALUC is appointed as follows:

- Two commissioners representing the County, appointed by board of supervisors.
- Two commissioners representing cities in the County, appointed by a committee of all mayors, except that at least one representative must be appointed from among "any cities contiguous or adjacent to the qualifying airport" (i.e., an airport served by a scheduled airline or one operated for the benefit of the general public).
- Two commissioners with expertise in aviation, appointed by a committee of the managers of all public airports within the County.
- One commissioner representing the general public, appointed by the other six members of the commission.

Each member of the ALUC appoints a proxy to serve as a representative and to vote when the member is absent. Proxies serve at the pleasure of the appointing member of the ALUC. The proxy must be in writing and filed at the ALUC office. The term of office on the ALUC is four years. Any member can be removed at any time and without cause by the appointing body (California PUC Section 21671.5(a)).

In accordance with adopted bylaws, public meetings are held on the third Wednesday of each month.

1.1.4 Relationship of the ALUC to County and City Governments

The relationship between the Alameda County ALUC and County government, the cities of Livermore, Pleasanton, and Dublin and any future jurisdiction affected by this document is determined by the State Aeronautics Act. On one level, the ALUC does not need the approval of the County or any affected jurisdiction to adopt this ALUCP or to carry out its project review

duties. However, despite its independent nature, the ALUC must still coordinate its activities with local land use jurisdictions on several matters:

- An ALUC must provide for a coordinated review in regards to the establishment of an airport influence area (AIA) boundary, which is considered mandatory, as state law requires that a "hearing and consultation with involved agencies" occurs (PUC Section 21675(c)).
- Once local agencies have revised their general or specific plans or overruled the ALUC, the proposed action of the local agency is not subject to further commission review, "unless the commission and the local agency agree that individual projects shall be reviewed by the commission" (Section 21676.5(b)).
- Once an ALUC has adopted a compatibility plan, the authority and responsibility for enforcing its compatibility policies lies fully with the affected jurisdictions.

1.2 Policy Framework

The policies set forth in Chapters 2 and 3 of this document are based upon three primary sources: state laws and guidelines; LVK's FAA-approved ALP (2008); and the policies of affected local agencies with regard to land use, which can be found in general and specific plans as well as zoning ordinances.

1.2.1 State Laws and Guidelines

Most of the revisions that have been made to the state laws governing ALUCs over the last thirty years involve the procedures by which ALUCs operate. The most significant among the amendments to the state law (adopted in 1982) was the requirement for local general and specific plans to be made consistent with the ALUCP. This amendment also limited the authority of the ALUC to review individual development proposals and reduced the vote requirement for a local jurisdiction to override an ALUC decision from four fifths to two thirds.

While many of the procedures that govern how ALUCs operate are defined by state law, with respect to the creation of airport land use compatibility criteria, very little is written in the statutes. Instead, a portion of the law enacted in 1994 makes reference to another guiding document, the *California Airport Land Use Planning Handbook*, published by the California Division of Aeronautics. While the *Handbook* does not constitute official state policy, the statutes say that when preparing compatibility plans for airports, ALUCs shall "be guided by" this resource. The policies and maps in this plan reflect the guidance provided by the *California Airport Land Use Planning Handbook*, dated January 2002[2], which was the current edition at the time this ALUCP was prepared.

[2] The January 2002 edition of the Handbook can be downloaded from the Division of Aeronautics website at www.dot.ca.gov/hq/planning/aeronaut.

1.2.2 Relationship to Other Planning Documents

The development of most airports is guided by an airport master plan. ALUCPs are distinct from airport master plans in function and content, as airport master plans address on-airport uses and facilities, whereas ALUCPs address the compatibility of off-airport land uses. An airport master plan, which is prepared for and adopted by the entity that owns and operates the airport, assesses the demand for airport facilities and guides the development necessary to meet those demands. The master plan for LVK, adopted by the City of Livermore in 1975, was rescinded in March of 2010. Development of LVK is now regulated under the City's General Plan, an Airport Zoning District, and the operational and development policies associated with this District.

The Airport Zoning District is split into two subzones, the Airport-Operations subzone and the Airport-Services subzone. The purpose of the Airport-Operations subzone is to guide the development of airport operations facilities, by providing standards and guidelines for aviation land uses and related structures and facilities necessary for the safe operation of LVK. The purpose of the Airport-Services subzone is to provide development standards and allow aviation-related land uses and related structures and facilities necessary to adequately support the operation of LVK.

The ALUCP should be consistent with airport goals, insofar as these goals conform to regional planning policies, and take into account environmental impacts. State law provides that, before modification of a general plan, the public agency must submit the proposed change to the ALUC for a finding of consistency with the ALUCP. The City of Livermore's General Plan, as the guidance document for the development of LVK, is subject to ALUC review (as are the other goals and policies established in the General Plan). The ALUC will follow the same procedures used for review of city or County actions. The public agency may override the ALUC with a two-thirds vote of its governing body, if it makes specific findings that the proposed action is consistent with the purposes of the state ALUC law.

1.3 Plan Implementation

1.3.1 General Plan Consistency

State law requires local general plans and applicable specific plans to be consistent with the ALUCP. In the event that the ALUCP is amended, the law requires the local public agency to amend its general or specific plan within 180 days to be consistent with the revised ALUCP (Government Code, Section 65302.3). In the event that the local public agency does not concur with a provision of the ALUCP, the public agency may override the ALUC by a two-thirds vote after first notifying the ALUC and Caltrans Division of Aeronautics at least 45 days prior to the decision to overrule the ALUC, holding a public hearing, and making findings that the general plan of the local jurisdiction is consistent with the intent of state law.

To be consistent with an ALUCP, a general plan must specifically address compatibility planning issues and must avoid direct conflicts with compatibility planning criteria. Consistency implies

that "the concepts, standards, physical characteristics, and resulting consequences of a proposed action must not conflict with the intent of the law of the compatibility plan to which the comparison is being made" (Caltrans, 2002). The *Handbook* identifies the following methods for compatibility planning issues to be reflected in a general plan:

- Incorporate Policies into Existing General Plan Elements. This method requires the incorporation of all airport land use compatibility measures into appropriate general plan elements. For example, noise compatibility measures may be incorporated into the city's or county's general plan noise element. With this approach, direct conflicts between the ALUCP and general plan are eliminated and compliance mechanisms are fully incorporated into the local jurisdiction's general plan.

- Adopt a General Plan Airport Element. This format may be appropriate when a city's or county's general plan also needs to address on-airport development or operational issues. Modification of other general plan elements may still be necessary to eliminate conflicts and provide cross-referencing.

- Adopt the ALUCP as a Stand-Alone Document. A city or county can adopt the ALUCP, and changes to the city's or county's general plan would be minimal. Policy reference to the separate ALUCP would need to be added to the general plan, and any direct land use or other conflicts with compatibility planning criteria would have to be removed. The compatibility policies would substantially appear only in the stand-alone compatibility plan.

- Implement Compatibility Policies through Zoning. Adoption of an airport combining district or overlay zoning ordinance by a local government is a way of codifying airport compatibility criteria described only conceptually in the ALUCP. A combining district can supplement local land use designations by adding specific noise and/or safety criteria applicable to future development in the airport influence area. Policy reference to airport compatibility in the general plan could be as simple as stating support of the ALUCP and that policy implementation is by means of the combining zone.

1.3.2 Project Referrals

Counties and cities are obligated by state law to submit land use actions and other actions such as zoning ordinances and building regulations for the ALUC's review. In addition to the types of land use actions for which referral to the ALUC is mandatory in accordance with state law, the ALUCP specifies other land use projects that either must or should be submitted for review. These major land use actions are defined in Section 2.6.2 of this ALUCP.

1.4 Plan Contents

The ALUC is concerned with airport activities that may adversely affect nearby land uses within the AIA. The most significant airport-related concerns are:

- Exposure to aircraft noise;
- Exposure of persons on the ground to accident potential;
- Prevention of obstructions to air navigation (tall objects; objects in safety zones); and

- Prevention of hazards to flight such as wildlife hazards, smoke, flare, lighting, electrical interference and thermal plumes.

For each concern, the ALUC has adopted land use compatibility policies in Chapters 2 and 3 of the ALUCP; these policies address existing and future conditions at LVK and its environs.

This ALUCP is organized as follows:

Chapter 2: Chapter 2 of this ALUCP presents the airport compatibility and review policies that are applicable throughout Alameda County.

Chapter 3: Chapter 3 of this ALUCP Update presents compatibility and review policies and maps specific to LVK.

Chapter 4: Chapter 4 of this ALUCP Update provides background data for LVK and its environs.

Chapter 5: Chapter 5 provides references for the data presented in this ALUCP.

Appendix A – J: The appendices present supplemental data and source documents that were used to develop the LVK ALUCP.

CHAPTER 2
County-wide Policies

2.1 Introduction

The policies set forth in Chapters 2 and 3 of the Livermore Municipal Airport Land Use Compatibility Plan serve two functions:

1. To articulate the procedures to be used by the Alameda County Airport Land Use Commission (ALUC) and affected local agencies for the purpose of performing airport land use compatibility review as required in the California State Aeronautics Act (Public Utilities Code Section 21670 et seq.).
2. To identify the compatibility criteria that the ALUC shall use in the review of projects involving land use development within the Livermore Municipal Airport (LVK) airport influence area (AIA), including Airport master plans and other development plans for LVK. Similarly, local agencies such as Alameda County, the cities of Livermore, Pleasanton, and Dublin and any future jurisdictions that may be affected by this document shall use this airport land use compatibility plan (ALUCP) to modify their respective general or specific plans and zoning ordinances for consistency with this ALUCP.

While the policies presented in this chapter specifically address ALUC review procedures and county-wide compatibility considerations that apply to airports and heliports within the Alameda County, compatibility criteria and other policies specifically designed for LVK are presented in Chapter 3.

2.2 ALUCP Lifecycle

According to State law, the ALUCP should be based on a long-range plan that reflects the anticipated growth of the airport for at least 20 years. This timeframe is a general guideline, as the ALUCP contains various components of differing life spans. Among the components hardest to estimate are future noise levels near an airport because of uncertainties associated with the level of operations and changes in fleet mix, etc. Therefore, periodic adjustment of the ALUCP can be expected in order to reflect changes in anticipated airport impacts, revisions in state and federal law and regulations, and new experience gained concerning the suitability of guidelines set by the ALUC.

2.3 Effective Date

The policies presented in this ALUCP shall become effective for LVK on the date that the Alameda County ALUC adopts the plan. Until that time, the policies set forth in the 1986 Alameda County Airport Land Use Policy Plan (ALUPP) shall remain in effect. Should this ALUCP be invalidated in its entirety by a court action, the 1986 ALUPP shall become effective. Additionally, any action to invalidate the compatibility plan associated with another public-use airport in the County shall not invalidate this ALUCP.

2.4 Definitions

Definitions of terms for the purposes of the policies set forth in this document are as follows (Caltrans, 2002). Additional definitions are found in the Glossary.

Aeronautics Act: Sections 21670 et seq. of the California Public Utilities Code.

Airport: An area of land or water that is used or intended to be used for the landing and taking off of aircraft, including its buildings and facilities.

Airport Influence Area (AIA): The area in which current or future airport-related noise, overflight, safety, and/or airspace protection factors may significantly affect land uses or necessitate restrictions on those uses. In most circumstances, the airport influence area is designated by the ALUC as its planning area boundary for the airport and the two terms can be considered synonymous.

Airport Land Use Commission (ALUC): A commission authorized under the provisions of the California Public Utilities Code, Sections 21670 et seq. and established (in any county within which a public-use airport is located) for the purpose of promoting compatibility between airports and the land uses surrounding them.

Airport Land Use Compatibility Plan (ALUCP): As used herein, a plan, usually adopted by an ALUC, which sets forth policies for promoting compatibility between airports and the land uses which surround them. This document is sometimes referred to as an Airport Land Use Policy Plan (ALUPP).

Aviation-Related Use: Any facility or activity directly associated with the air transportation of persons or cargo or the operation, storage, or maintenance of aircraft at an airport or heliport. Such uses specifically include runways, taxiways, and their associated protected areas defined by the Federal Aviation Administration (FAA), together with aircraft aprons, hangars, fixed base operations facilities, terminal buildings, etc.

Avigation Easement: A type of easement that typically conveys the following rights:

a. A right-of-way for free and unobstructed passage of aircraft through the airspace over the property at any altitude above a surface specified in the easement (usually set in accordance with the FAR Part 77 criteria).

b. A right to subject the property to noise, vibrations, fumes, dust, and fuel particle emissions associated with normal airport activity.

c. A right to prohibit the erection or growth of any structure, tree, or other object that would enter the acquired airspace.

d. A right-of-entry onto the property, with proper advance notice, for the purpose of removing, marking, or lighting any structure or other object that enters the acquired airspace.

e. A right to prohibit electrical interference, glare, misleading lights, visual impairments, wildlife hazards, or other hazards to aircraft flight from being created on the property.

Community Noise Equivalent Level (CNEL): The noise metric adopted by the State of California for evaluating airport noise. It represents the average noise level during a 24-hour day, adjusted to an equivalent level to account for the lower tolerance of people to noise during evening and nighttime periods relative to the daytime period.

Compatibility Zone: Any of the airport influence area zones set forth in this ALUCP for the purposes of determining land use compatibility.

Existing Land Use: A land use that either physically exists or else for which government approvals have been obtained through one or more of the following:

a. A valid building permit has been issued;

b. A legally valid development agreement has been approved and remains in effect, pursuant to Government Code Section 65866 which provides that *"A development agreement shall specify duration of the agreement, the permitted uses of the property, the density or intensity of use, the maximum height and size of proposed buildings, and provisions for reservation or dedication of land for public purposes."*;

c. A tentative parcel or subdivision map has been approved and the original period, excluding extensions, within which the approval is valid and has not expired;

d. A vesting tentative parcel or subdivision map has been approved, pursuant to Government Code, Section 66498.1(b), which "*confer a vested right to proceed with development standards in effect at the time the vesting tentative map is approved or conditionally approved*";

e. A final subdivision map has been recorded; or

f. A use permit, PUD, or PD indicating the permitted uses of the property, the density or intensity of use, the maximum height and size of proposed buildings, and provisions for reservation or dedication of land for public purposes that has been approved and not yet expired.

Federal Aviation Regulations (FAR) Part 77: The part of the Federal Aviation Regulations that addresses objects affecting navigable airspace.

Height Review Overlay Zone: The area around an airport where the ground lies above a FAR Part 77 surface or less than 35 feet beneath a FAR Part 77 surface.

Helipad: A small, designated area, usually with a prepared surface, on a heliport, airport, landing / takeoff area, apron / ramp, or movement area used for takeoff, landing, or parking of helicopters.

Heliport: A facility used for operating, basing, housing, and maintaining helicopters.

Infill: Development that takes place on vacant property largely surrounded by existing development, especially development that is similar in character.

Local Jurisdiction: Alameda County or any city or other government agency (excluding state and federal agencies) having jurisdiction over land uses within its boundaries.

Nonconforming Use: An Existing Land Use that does not conform to an adopted or subsequently amended airport land use compatibility plan.

Redevelopment: Construction of a new use (though this does not have to be a new land use type) to replace an Existing Land Use at a density or intensity that may differ from the existing use.

2.5 Geographic Scope

2.5.1 Airport Influence Area

The airport influence area (AIA), also known as the airport referral area, is the area in which current or future airport-related noise, overflight, safety, and/or airspace protection factors may significantly affect land uses or necessitate restrictions on those uses, as well as lands on which the uses could negatively affect the airport(s) in question.

The specific limits of the AIA of Livermore Municipal Airport are presented in Chapter 3. For a discussion of noise, height, and safety impacts and how those issues affect the areas in which this ALUCP applies, see Appendix B, “Airport Land Use Compatibility Concepts”.

2.5.2 County-wide Impacts on Flight Safety

Other lands, regardless of their location in the County, on which certain land use characteristics could adversely affect the safety of flight in the County, are included in this ALUCP. Specifically, any proposal for construction of any structure (including antennas) in the County that rises 200 feet above the ground level at the site is included in this ALUCP.

2.5.3 New Airports

The site and environs of any new airport that may be proposed anywhere in the County, including incorporated cities, and which requires an Airport Permit from the California Department of Transportation (Caltrans) Aeronautics Division are included in this ALUCP.

2.5.4 Heliports and Helipads

This ALUCP applies to any site and environs of any existing or proposed public-use, private-use, or special-use heliport or helipad (as defined by Caltrans) in the County, including incorporated cities that are included in this ALUCP (see Table 2-1 for list of existing heliports).

TABLE 2-1
HELIPORTS IN ALAMEDA COUNTY

Heliport Name	Location	Public/Private	Number of daily operations	Number of Night Operations (10:00PM to 7:00 AM)	Years of Operation	Miscellaneous
Alameda County, Alco Park	1221 Oak St. Oakland, CA 94607	Private	N/A	N/A	42	Last Inspected July 5, 1990
ACFD, Station 14	11345 Sunol Blvd. Sunol, CA 94586	Public	N/A	N/A	N/A	N/A
Camp Park Military Reservation	Dublin, CA	Public	N/A	N/A	N/A	N/A
Children's Hospital, Oakland	747 52nd St. Oakland, CA 94609	Private	Variable*	Variable*	8	Last Inspected December 17, 2003
Eden Medical Center	20103 Lake Chabot Rd. Castro Valley, CA 94546	Private	Variable*	Variable*	11	Last Inspected September 9, 2004
Fairview Site	27218 Fairview Ave., Fairview, CA 94542	Private	N/A	N/A	N/A	N/A
First Interstate Bank OPS	3440 Walnut Ave. Fremont, CA 94538	Private	N/A	N/A	24	Last Inspected May 25, 1990
Hacienda Business Park	4309 Hacienda Dr. Pleasanton, CA 94566	Private	N/A	N/A	21	Last Inspected January 31, 1990
Little Valley Site	Sunol, CA	Private	N/A	N/A	N/A	N/A
Ruby Hills Site	Pleasanton, CA	Private	N/A	N/A	N/A	No longer in use
Saint Rose Hospital	27200 Calaroga Ave. Hayward, CA 94545	Private	Variable*	Variable*	38	Last Inspected May 9, 2001
Valleycare Medical Center	5555 W. Las Positas Blvd. Pleasanton, CA 94588	Private	Variable*	Variable*	18	Last Inspected June 6, 2003
Washington Hospital	Corner of Bart Way and Civic Center Dr.	Private	Variable*	Variable*	N/A	N/A
PG&E Training Facility	7205 National Dr., Livermore ,CA 94550	Private	N/A	N/A	N/A	N/A

* Variable - Heliport use at hospital locations based upon need.
N/A = Not available

Source: Alameda County, 2007.

FAA Advisory Circular (AC) 150/5390-2B, "Heliport Design," provides recommendations for heliport design and describes the federal requirements associated with heliport development. Alameda County encourages those with heliport proposals to implement the guidance set forth in the AC to the greatest extent practicable. The complete AC is available online in several files that can be downloaded upon request from the FAA website at: www.faa.gov. For more information pertaining to this FAA guidance, please refer to Appendix G, "Heliport Design." For heliport permitting requirements, contact Caltrans' Division of Aeronautics. Also see Section 2.7.4 for ALUC review criteria for new heliports, or heliport master/development plans.

2.6 Scope of ALUC Review

As specified by the State Aeronautics Act and described in the Handbook, review of local actions pertaining to airport land use compatibility is one of the fundamental reasons for the formation of ALUCs. Plans that undergo mandatory review by ALUCs prior to their adoption include general and specific plans and ordinances prepared by local jurisdictions (see Sections 2.6.1 and 2.6.2), as well as airport and heliport plans, including master plans, expansion plans, and plans for the construction of new facilities. Other types of actions proposed within the AIA that have the potential to affect land use or airport operations should also be reviewed by the ALUC for a determination of consistency with this ALUCP (see Section 2.6.2.).

2.6.1 Actions Requiring ALUC Review

2.6.1.1 Land Use Plans and Zoning Ordinances

As noted in the Handbook, The following plans or ordinances shall be reviewed by the ALUC for determination of consistency with the ALUCP prior to their approval by the local jurisdiction:

a. The adoption or approval of any amendment to a general or specific plan that proposes new land uses, or increases the intensity or density of Existing Land Uses within an AIA (California Public Utilities Code Section 21676).

    1. Until such time as the ALUC finds that a local jurisdiction's general plan or specific plan is consistent with the ALUCP, or the local jurisdiction has overruled the ALUC's determination of inconsistency by a two-thirds vote of its governing body, the local jurisdiction shall refer all actions, regulations, and permits involving land within an AIA to the ALUC for review (California Public Utilities Code 21676.5(a)). Only those actions that the ALUC elects not to review are exempt from this requirement.

    2. After a local jurisdiction has revised its general plan or specific plan for consistency with the ALUCP or has overruled the ALUC by a two-thirds vote of its governing body, or if no such review is required because the applicable general plan or specific plan authorizes only Existing Land Uses, the ALUC does not have authority under state law to require that all actions, regulations, and permits be referred for review. However, the ALUC and the local agency can agree that the ALUC should continue to review individual projects in an advisory capacity.

        i. The ALUC requests local jurisdictions to continue to submit major land use actions as listed in Section 2.6.2.

ii. Review of these actions is requested only if a review has not previously been conducted as part of a general plan, specific plan, or zoning ordinance action or if sufficient project-level detail to enable a full assessment of compatibility was not available at the time of a previous review.

iii. Because the ALUC is acting in an advisory capacity when reviewing projects under these circumstances, local jurisdictions are not required to adhere to the override process if they elect to approve a project without incorporating design changes or conditions suggested by the ALUC.

b. The adoption or approval of a zoning ordinance which (1) introduces a new land use within an AIA not contemplated by an Existing Land Use, (2) increases the intensity or density of, or permitted by, an Existing Land Use, and (3) involves any of the airport-related concerns listed in Section 1.4 of this ALUCP. Any proposed change or variance to any such ordinance or regulation also must be submitted for ALUC review if issues of noise, safety, airspace protection, and overflight are involved.

c. The following actions or procedures implemented by special districts, schools districts, and community college districts would require ALUC review if they are not deemed consistent with an applicable general plan, specific plan, or zoning ordinance (as determined by the local agency):

   1. The acquisition of land and construction of a building, for public purposes, that requires conformity with an adopted general plan (Gov. Code Section 65402); and

   2. Major public works projects that require conformity with an adopted general plan (Gov. Code Section 65401).

d. Proposed redevelopment of a property which (1) introduces a new land use within an AIA, (2) increases the intensity or density of, or permitted by, an Existing Land Use which the existing use is consistent with the local general plan and/or specific plan, but does not conform to the compatibility criteria set forth in this ALUCP. (See section 2.7.5.7(a) for exceptions to this Policy.)

   Proposed land use actions covered by Sections 2.6.1.1(a), 2.6.1.1(b), and 2.6.1.1(c), and 2.61.1.1(d) shall initially be reviewed by the ALUC Administrative Officer or her or his designee. If the ALUC Administrative Officer determines that significant compatibility issues are evident, the proposal shall be forwarded to the ALUC for review and decision. The ALUC authorizes the ALUC Administrative Officer to approve proposed actions having no apparent compatibility issues.

2.6.1.2 Airport and Heliport Plans

The following types of actions shall be referred to the ALUC for determination of consistency with the ALUCP prior to their approval by the local jurisdiction:

a. The adoption or modification of the master plan for an existing public-use airport (California Public Utilities Code Section 21676(c)).

b. Any proposal for expansion of an existing airport or heliport not included in that airport or heliports approved master plan if such expansion will require an amended airport permit from the state of California (California Public Utilities Code 21664.5).

c. Any proposal for a new airport, heliport, or helipad whether, for public use or private use (California Public Utilities Code Section 21661.5), if the facility requires a State Airport Permit.

2.6.2 Land Use Actions Recommended for ALUC Review

Although the ALUC does not have the authority under state law to require that all actions, regulations, and permits be referred for review, the ALUC requests that certain types of actions be referred to the ALUC for determination of consistency with the ALUCP prior to their approval by the local jurisdiction.

For example, the scope or character of certain proposed major land use actions, as listed below, is such that their compatibility with airport activity may be cause for concern. Even though these actions may be generally consistent with the local general plan or specific plan, sufficient detail may not be known to enable a full airport compatibility evaluation at the time that the general plan or specific plan is reviewed. To enable better assessment of compliance with the compatibility criteria set forth herein, ALUC review of these actions may be warranted.

a. Any proposed expansion of the sphere of influence or boundary of a city or special district that would extend into the AIA.
b. Proposed pre-zoning of property within the AIA associated with future annexation of land to a city.
c. Proposed residential development within the AIA, including land divisions, consisting of five or more dwelling units or parcels.
d. Any discretionary development proposal within the AIA for projects having a building floor area of 20,000 square feet or greater.
e. Proposed land acquisition within the AIA by a government entity for any facility that would act as an indoor or outdoor assembly area for a large number of people (i.e., meeting halls, parks, correctional institutions, etc.).
f. Any obstruction reviewed by the FAA in accordance with FAR Part 77 that receives a finding other than “not a hazard to air navigation.”
g. Any industrial use within the AIA having the potential to interfere with, or create hazards to aircraft in flight including, but not limited to:
    1. Electrical or other interference with radio communications or navigational signals;
    2. Lighting which could be mistaken for airport lighting;
    3. Thermal plumes;
    4. Glare in the eyes of pilots or aircraft using the airport; or
    5. Impaired visibility near the airport from smoke or steam.
h. Other nonresidential development including, but not limited to:
    1. Institutional uses (schools, prisons);
    2. Utility uses (utility poles, electrical substations, water supply and treatment facilities, and power plants);
    3. Healthcare uses (hospitals, respite facilities); and
    4. Open spaces (parks, golf courses, agricultural areas, wildlife refuges, or other forms of land use that could serve as habitat for potentially hazardous wildlife).

i. Projects within the AIA with the potential to attract an increased number of birds to the vicinity of an airport, such as those with large water features, ponds, etc.

j. Proposed non-aviation development of airport property if such development has not previously been included in an airport master plan or community general plan reviewed by the ALUC. (See Section 2.4 for definition of aviation-related use.)

k. Regardless of location within Alameda County, any proposal for construction or alteration of a structure (including antennas) taller than 200 feet above the ground level at the site. (Such structures also require notification to the Federal Aviation Administration in accordance with Federal Aviation Regulations, Part 77, Paragraph 77.13(a)(1).)

l. Any other proposed land use action, as determined by the local planning agency, involving a question of compatibility with airport activities.

2.7 Review Process

2.7.1 General

Proposed actions listed in Section 2.6.2 should be referred to the ALUC Administrative Officer as early as possible so that the ALUC's Administrative Officer's review, or when appropriate, the ALUC's review, can be duly considered by the local jurisdiction prior to formalizing its actions. Though the timing may vary, all projects must be submitted to the ALUC for review prior to final approval by the local jurisdiction.

2.7.2 Public Noticing

Where applicable, the ALUC shall provide public notice and obtain public input in accordance with the California Public Utilities Code (PUC Section 21675.2(d)) and general plan law (Government Code, Section 65090) before action on any plan, regulation, or other land use proposal under consideration.

2.7.3 Review Process for Land Use Plans and Zoning Ordinances

2.7.3.1 Initial Review of General Plan Consistency

In conjunction with adoption of this ALUCP, the ALUC shall review the general plans, specific plans, and zoning ordinances of affected local jurisdictions to determine their consistency with the ALUCP.

a. Within 180 days of the ALUC's adoption or amendment of the ALUCP, each local jurisdiction must amend its general plan and any applicable specific plan to be consistent with the ALUCP or, alternatively, adopt findings and override the ALUC in accordance with Section 21676(b) of the Public Utilities Code. If an applicable specific plan or general plan authorizes Existing Land Uses, the local jurisdiction need not amend the specific plan or general plan to make such Existing Land Uses consistent with the provisions of this ALUCP.

b. Prior to taking action on a proposed amendment to a general plan or specific plan, the local jurisdiction must submit a draft of the proposal to the ALUC for review and approval in accordance with Section 21676(b) of the Public Utilities Code.

c. In conjunction with its submittal of a general plan or specific plan amendment to the ALUC, a local jurisdiction may request that the ALUC modify the areas defined as "infill" in accordance with Section 2.7.5.7 (a). The ALUC will include a determination on the infill as part of its action on the consistency of the general plan and specific plans.

d. After a local jurisdiction has revised its general plan or specific plan for consistency with the ALUCP, subsequent land use proposals within the AIA (which are consistent with the applicable general plan, specific plans, and zoning ordinances) are subject to ALUC review only under the conditions indicated in Sections 2.6.1 and 2.6.2.

2.7.3.2 ALUC Administrative Officer Choices

The ALUC Administrative Officer, when reviewing major land use actions, has two choices of action:

a. Find that the proposed project does not contain characteristics likely to result in inconsistencies with the compatibility criteria set forth in this ALUCP. The ALUC Administrative Officer is authorized to make a finding of consistency, in writing, for such projects on behalf of the ALUC.

b. Find that the proposed project may be inconsistent with the ALUCP. The ALUC Administrative Officer shall forward any such project to the ALUC for a consistency determination hearing.

2.7.3.3 ALUC Action Choices

When reviewing a general plan, specific plan, or zoning ordinance for consistency with the ALUCP, the ALUC has three choices of action:

a. Find the plan, ordinance, or regulation consistent with the ALUCP. To make such a finding with regard to a general plan, the conditions identified in Section 2.7.3.5 must be met.

b. Find the plan, ordinance, or regulation consistent with the ALUCP, subject to conditions and/or modifications that the ALUC may require.

c. Find the plan, ordinance, or regulation inconsistent with the ALUCP. In making a finding of inconsistency, the ALUC shall note the specific conflicts upon which its determination is based.

2.7.3.4 Response Time

The ALUC must respond to a local jurisdiction's request for a consistency determination on a general plan, specific plan, zoning ordinance, or building regulation within 60 days from the date of referral (California Public Utilities Code Section 21676(d)).

a. If the ALUC fails to make a determination within that period, the proposed action shall be deemed consistent with the ALUCP.

b. Regardless of ALUC action or failure to act, the proposed action must comply with other applicable local, state, and federal regulations and laws.

c. The referring agency shall be notified of the ALUC's action in writing.

2.7.3.5 Review Criteria

In order for a general or specific plan, or a zoning ordinance to be considered consistent with the ALUCP, both of the following must be accomplished:

a. No direct conflicts can exist between the two plans. Direct conflicts primarily involve general plan land use designations which do not meet the density or intensity criteria specified in the ALUCP although conflicts with regard to other policies also may exist. Note, however, that a general plan, specific plan, or zoning ordinance cannot be found inconsistent with the ALUCP because of land use designations and other criteria that reflect Existing Land Uses even if those designations conflict with the ALUC's compatibility criteria.

b. Provisions must be made for evaluation of proposed land use development situated within an AIA relative to the compatibility criteria set forth in the ALUCP.

    1. Even if the land use designations in a general plan have been deemed consistent with the ALUCP, evaluation of the proposed development relative to the land use designations alone is usually insufficient. General plans typically do not contain the detailed airport land use compatibility criteria necessary for a complete compatibility evaluation of proposed development.

    2. Local jurisdictions have the following choices, or a combination thereof, for satisfying this evaluation requirement:

        i. The general plan and/or referenced implementing ordinances and regulations must contain sufficient detail to enable the local jurisdiction to assess whether a proposed development fully meets the compatibility criteria specified in the ALUCP (this requires both that the compatibility criteria be identified and that project review procedures be described);

        ii. The ALUCP must be adopted by reference (additionally, the project review procedure must be described in a separate instrument presented to and approved by the ALUC); and/or

        iii. The general plan must indicate that all major land use actions, as listed in Section 2.6.2 or otherwise agreed to by the ALUC, shall be referred to the ALUC for review in accordance with the policies of Section 2.7.5.

    3. The status of ALUC review of major land use actions depends upon which of the preceding options the local jurisdiction selects for making its general plan consistent with the ALUCP. This status, in turn, affects whether a local jurisdiction would be required to use the override process in the event of a disagreement with the ALUC's action.

If either of the first two options listed in Section 2.7.3.4(b)(2) is selected, then referral of major land use actions to the ALUC is voluntary. In this case, the ALUC's review is advisory and the local jurisdiction would not need to use the override process if it elects to approve a project without incorporating the ALUC's comments.

If the third option listed in Section 2.7.3.4(b)(2) is selected, submittal of major land use actions for ALUC review is mandatory and override procedures would apply.

2.7.4 Review Process for Airport and Heliport Actions

2.7.4.1 Project Submittal Information

Any proposal for a new airport or heliport, or an airport or heliport master or development plan, submitted to the ALUC for review shall contain sufficient information to enable the ALUC to adequately assess the noise, overflight, safety, and airspace protection impacts of airport activity upon surrounding land uses.

a. At a minimum, information to be submitted shall include:
    1. A layout plan drawing of the facility showing the location of:
        i. Property boundaries;
        ii. Runways or helicopter takeoff and landing areas;
        iii. Runway or helipad protection zones; and
        iv. Aircraft or helicopter approach/departure flight routes.
    2. Airspace surfaces in accordance with FAR, Part 77.
    3. Activity forecasts, including the number of operations by each type of aircraft proposed to use the airport, the percentage of day, evening, and night operations, and the distribution of takeoffs and landings for each runway direction.
    4. Proposed flight track locations and projected noise contours or other relevant noise impact data.
    5. A map showing existing and planned land uses in the areas affected by aircraft activity associated with implementation of the proposed master plan or development plan.
    6. Any environmental document (initial study, draft environmental impact report, etc.) that has been prepared for the project.
    7. Identification and proposed mitigation of impacts on surrounding land uses.
b. Any applicable review fees as established by the ALUC shall accompany the application.

2.7.4.2 ALUC Action Choices for Reviews of New Airports and Heliports

When reviewing proposals for new airports or heliports, the ALUC's choices of action are:

a. Approve the proposal as being consistent with the specific review policies listed in Section 2.7.4.5.
b. Approve the proposal and adopt an ALUCP for that facility. State law requires adoption of such a plan if the airport or heliport will be a public-use facility (California Public Utilities Code Section 21675(a)).
c. Disapprove the proposal on the basis that the noise, safety, airspace protection, and overflight impacts it would have on surrounding land uses are not adequately mitigated.

2.7.4.3 ALUC Action Choices for Plans of Existing Airports or Heliports

When reviewing airport master plans or expansion plans for existing airports, the ALUC has three action choices:

a. Find the airport or heliport plan consistent with the ALUCP.
b. Find the airport or heliport plan inconsistent with the ALUCP.
c. Modify the ALUCP (after duly noticed public hearing) to reflect the assumptions and proposals in the airport or heliport plan.

2.7.4.4 Response Time

The ALUC must respond to a local jurisdiction's submittal of plans for a new airport or heliport, or an airport/heliport master or development plan, within 60 days from the date of referral (California Public Utilities Code Section 21676(d)).

a. If the ALUC fails to make a determination within that period, the proposed action shall be deemed consistent with the ALUCP.
b. Regardless of ALUC action or failure to act, the proposed action must comply with other applicable local, state, and federal regulations and laws.
c. The referring agency shall be notified of the ALUC's action in writing.

2.7.4.5 Review Criteria for New Airports or Heliports

In reviewing proposals for new airports and heliports, the ALUC shall focus on the potential noise, overflight, safety, and airspace protection impacts upon surrounding land uses. The review should examine the kinds of impacts that these factors would have upon both existing and planned land uses. Items to be considered should include:

a. Whether the existing or planned land uses would be considered incompatible with the airport or heliport if the latter were already in existence.
b. The measures provided in the development plan to mitigate the effects of noise, safety, height restriction, and overflight impacts on surrounding land uses, such as:
    1. Locating flight tracks so as to minimize the impacts;
    2. Other operational procedures to minimize impacts; and
    3. Acquisition or property interests (fee title or easements) on the impacted land.
c. The ALUC shall evaluate the adequacy of the proposed facility design (in terms of federal and state standards) only to the extent that the design affects surrounding land use. The ALUC does not have the authority to make a determination of conformance with federal and state standards.
d. The ALUC must base its review on the proposed airfield or heliport design. The ALUC does not have the authority to require alterations to the airfield or heliport design.
e. The review shall examine the relationships between existing and planned land uses in the vicinity of the proposed airport or heliport and the impacts that the proposed facility would have upon these land uses.

f. Other types of environmental impacts (e.g., air quality, water quality, natural habitats, vehicle traffic, etc.) are not within the scope of ALUC review.

2.7.4.6 Review Criteria for Master or Development Plans

When reviewing new or modified airport master or development plans for existing airports, the ALUC shall determine whether activity forecasts or proposed facility development identified in the plan differ from the forecasts and development assumed for that airport in this ALUCP. Attention should specifically focus on:

a. Activity forecasts that:
   1. Are significantly higher than those in the ALUCP; or
   2. Include a higher proportion of larger or noisier aircraft.
b. Proposals to:
   1. Construct a new runway or helicopter takeoff and landing area;
   2. Permanently change the length, width, or landing threshold location of an existing runway;
   3. Establish an instrument approach procedure.

2.7.4.7 Consistency Determination Criteria for Master or Development Plans

The ALUC shall determine whether the proposed master plan or development plan is consistent with the ALUCP. The ALUC shall base its determination of consistency on:

a. Findings that the forecasts and aviation-related development identified in the master or development plan would not result in greater noise, overflight, or safety impacts or height restrictions on surrounding land uses than are assumed in the ALUCP.
b. A determination that any non-aviation development proposed within the airport or heliport boundary will be consistent with the basic compatibility criteria set forth in Table 2-3.

2.7.5 Review Process for Proposed Land Use Actions

2.7.5.1 Information Required for Review of a Proposed Individual Project

Project sponsors shall provide information for ALUC review. Items (a) through (f) below are summarized in Table 2-2. Additional information may be requested as needed during ALUC evaluation of the proposed project.

a. Indication, in writing, that the proposed local action is referred to the ALUC for mandatory review and comment.
b. Site maps to indicate the location of the proposed local action.
c. Any development or development application has been proposed to the referring jurisdiction or is known by the referring jurisdiction to be in preparation in conjunction with the local action, and the identities of the applicant or applicants.

d. A full project description and map of the geographic area. The map and description must indicate:

   1. The geographic area encompassed by the proposed local action;
   2. The relationship of the proposed local action to the Airport;
   3. The relationship of the proposed local action to the safety zones as defined by the ALUCP in force; and
   4. The relationship of the proposed local action to airport noise contours, as defined by the ALUCP.

e. A description of uses, land use densities, residential land use densities, and open space conservation proposed for the local action.

f. An analysis of the maximum elevation of improvements (i.e., site elevation plus height of improvements) that would be permissible under the terms and conditions of the proposed local action, and of the relationship of the maximum allowable elevation of improvements to the applicable imaginary airport surfaces as defined in Part 77 of the Federal Aviation Regulations.

g. A copy of any Initial Study, Environmental Impact Report, Environmental Assessment, Environmental Impact Statement, noise study, or other environmental evaluation prepared or required in conjunction with the proposed local action.

h. A written assurance that for residential property within the AIA offered for sale or lease the notice of intention filed with the Department of Real Estate shall include the following (as per the provisions of Business and Professional Code Section 11010 and Civil Code Sections 1102.6, 1103.4, and 1353):

   NOTICE OF AIRPORT IN VICINITY: This property is presently located in the vicinity of an airport, within what is known as an airport influence area. For that reason, the property may be subject to some of the annoyances or inconveniences associated with proximity to airport operations (for example: noise, vibration, or odors). Individual sensitivities to those annoyances can vary from person to person. You may wish to consider what airport annoyances, if any, are associated with the property before you complete your purchase and determine whether they are acceptable to you.

If the applicant has not provided complete and sufficient information needed for adequate review of the proposed project, ALUC staff will contact the applicant and request the missing items to complete ALUC review.

TABLE 2-2
INFORMATION REQUIRED FOR ALUC REVIEW OF PROPOSED LAND USE ACTIONS

	Local Actions*				
Information Required	**General Plan**	**Specific Plan**	**Zoning Ordinance**	**Building Regulation**	**Individual Project**
Indication (in writing) that the proposed local action is referred to the ALUC for mandatory review under the provisions of the State of California Public Utilities Code	Y	Y	Y	Y	N
Indication (in writing) that the proposed local action is referred to the ALUC for optional review and comment	N	N	N	N	Y
Full text of the proposed referring agency action	Y	Y	Y	Y	N/A

TABLE 2-2
INFORMATION REQUIRED FOR ALUC REVIEW OF PROPOSED LAND USE ACTIONS

	Local Actions*				
Information Required	**General Plan**	**Specific Plan**	**Zoning Ordinance**	**Building Regulation**	**Individual Project**
Site map of the proposed local action	Y	Y	Y	N/A	Y
Project site map and project description including:					
▪ Geographic Area	Y	Y	Y	N/A	Y
▪ Relationship of proposed action to the airport, safety zones, and noise contours	Y	Y	Y	N/A	Y
▪ Elevation of the proposed project action	Y	Y	Y	N/A	Y
A description of land uses, densities, and open space conservation for the proposed action	Y	Y	Y	N/A	Y
A copy of any CEQA or NEPA document, noise study, or other environmental evaluation prepared in conjunction with the proposed action.	Y	Y	Y	N/A	Y

Abbreviations:

Y - Yes, information is required; **N** - No, information is not required; **N/A** - Not applicable

* This also includes amendments to general and specific plans.

2.7.5.2 ALUC Administrative Officer's Choices

The ALUC Administrative Officer, when reviewing major land use actions, has two choices of action:

a. Find that the proposed project does not contain characteristics likely to result in inconsistencies with the compatibility criteria set forth in this ALUCP. The ALUC Administrative Officer is authorized to make a finding of consistency, in writing, for such projects on behalf of the ALUC.

b. Find that the proposed project may be inconsistent with the ALUCP. The ALUC Administrative Officer shall forward any such project to the ALUC for a consistency determination hearing.

2.7.5.3 ALUC Action Choices

The ALUC has three choices of action when reviewing a major land use project proposal:

a. Find the project consistent with the ALUCP.

b. Find the project consistent with the ALUCP, subject to compliance with such conditions as the ALUC may require. Any such conditions should be limited in scope and be described in a manner which allows compliance to be clearly assessed (e.g., the height of a structure).

c. Find the project inconsistent with the ALUCP. In making a finding of inconsistency, the ALUC shall note the specific conflicts upon which its determination is based.

2.7.5.4 Response Time

State law does not specify a timeframe for ALUCs to review land use actions other than amendment of a general plan or specific plan or the addition or approval of a zoning ordinance or building regulation. Nevertheless, the policy of the Alameda County ALUC is that:

a. Reviews of projects forwarded to the ALUC Administrative Officer for a consistency determination shall be completed within 21 days following the submittal of a complete application. Should the project require further review, the Administrative Officer will forward the project to the ALUC, and will schedule a hearing within 60 days of project referral.

b. The date of referral is deemed to be the date on which all applicable project submittal information as listed in Section 2.7.5.1 is received by the ALUC Administrative Officer.

c. If the ALUC Administrative Officer or the ALUC fails to make a determination within the above time period, the proposed action shall be deemed consistent with the ALUCP.

d. Regardless of action or failure to act on the part of the ALUC Administrative Officer or the ALUC, the proposed action still must comply with other applicable local, state, and federal regulations and laws.

e. The referring agency shall be notified of the ALUC Administrative Officer's and/or the ALUC's action in writing.

2.7.5.5 Subsequent Review

Once a project has been found consistent with the ALUCP, it need not be referred for review at subsequent stages of the planning process (e.g., for a use permit after a zoning change has been reviewed) unless:

a. Insufficient information was available at the time of the ALUC's original review of the project to assess whether the proposal would be fully in compliance with compatibility criteria (e.g., the site layout and structure height might not be known at the time a general plan change or zoning amendment, such as a PUD or PD, is submitted).

b. The design of the project subsequently changes in a manner that could raise questions as to the validity of a previous finding of compatibility. Changes warranting review include, but are not limited to, the following:

    1. An increase in the number of dwelling units proposed for the site;

    2. A proposed increase in intensity of use (more people on the site);

    3. Incorporation of clustering or modifications to the configuration of open land areas proposed for the site; and/or

    4. A proposed increase in the height of structures or other design features.

c. The local jurisdiction concludes that further review is warranted.

d. The ALUC requests further review at a date later in the approval process.

2.7.5.6 Basic Land Use Compatibility Criteria

The basic compatibility criteria table (see Table 2-3) represents a compilation of compatibility criteria associated with noise, overflight, safety, and airspace protection impacts. The basic

TABLE 2-3
BASIC COMPATIBILITY CRITERIA AND SUPPORTING INFORMATION

Safety Zone/FAR Part 77 Surface	Compatibility Qualities	Compatibility Factors / Runway Proximity
Runway Protection Zone / Approach Surface (Zone 1)	• Prohibit all structures except those with aeronautical functions • Prohibit residential land uses • Prohibit objects exceeding Part 77 height limits • Prohibit storage of hazardous materials • Avigation easement dedication	• Very high risk • Runway Protection Zone is defined by FAA criteria • Exposure to high noise aircraft levels • Aircraft approaching/departing airport at low altitudes
Inner Approach/Departure Zones / Approach Surface (Zone 2)	• Prohibit schools, day care centers, libraries, hospitals, nursing homes, and places of worship • Limit nonresidential development to low-intensity uses (see Notes for interior noise level requirements) • Prohibit above ground storage, hazardous materials or other hazards to flight/objects exceeding Part 77 height limits • Allow only low density (e.g., rural residential) residential development (if not deemed unacceptable because of noise—see Notes) • Avigation easement dedication	• Substantial Risk • RPZs together with inner safety zones encompass 30% - 50% of near-airport aircraft accident sites (air carrier and general aviation) • Encompasses areas overflown at low altitudes (typically 200-400 feet above runway elevation)
Inner Turning Zones / Transitional Surface (Zone 3)	• Prohibit critical infrastructure facilities • Limit residential uses to very low densities (if not deemed unacceptable because of noise—see Notes) • Avoid non-residential uses having moderate or higher usage intensities (e.g., major shopping centers, sports venues, fast food restaurants, theaters, meeting halls, buildings with more than three above ground floor should be avoided) • Prohibit children's schools, day care centers, hospitals, nursing homes • Avoid uses that could create hazards to flight • Avigation easement dedication	• Zone primarily applicable to general aviation airports • Covers locations where aircraft are typically turning from the base to final approach legs of the standard traffic pattern and are descending from traffic pattern altitude • Zone also includes the area where departing aircraft normally complete the transition from takeoff power and flap settings to a climb mode and have begun to turn their en route heading
Outer Approach/Departure Zones / Approach Surface (Zone 4)	• In undeveloped areas, limit residential uses to very low densities; if alternative uses are impractical, allow infill in urban areas (if not deemed unacceptable because of noise or safety-related concerns—see Notes) • Prohibit children's schools, large day care centers, hospitals, nursing homes • Limit non-residential uses as in Zone 3. • Prohibit other hazards to flight/objects exceeding Part 77 height limits	• Situated along extended runway centerline beyond Zone 2 • Approaching aircraft usually at less than traffic pattern altitude • Partially applicable for busy general aviation runways, runways with straight in instrument approach procedures, and other runways where straight-in or straight-out flight paths are common • Zone can be reduced in size or eliminated for runways with very low activity levels

TABLE 2-3
BASIC COMPATIBILITY CRITERIA AND SUPPORTING INFORMATION

Safety Zone/FAR Part 77 Surface	Compatibility Qualities	Compatibility Factors / Runway Proximity
	• Avigation easement dedication	
Sideline Zones / Transitional Surface (Zone 5)	• Avoid residential uses • Allow all common aviation-related activities provided that height criteria is met (also see Notes for interior noise level requirements) • Limit other non-residential uses similarly to Zone 3, but with slightly higher usage intensities • Prohibit children's schools, large day care centers, hospitals, nursing homes	• Encompasses close-in area lateral to runways • Area not normally overflown; primary risk is with aircraft losing directional control on takeoff • Area is on airport property at most airports
Traffic Pattern Zone / Horizontal Surface (Zone 6)	• Allow residential uses (if not deemed unacceptable because of noise—see Notes) • Allow non-residential uses; prohibit outdoor stadiums and similar uses with very high intensities • Prohibit children's schools, large day care centers. Avoid hospitals and nursing homes	• Generally low likelihood of accident occurrence at most airports; risk concern primarily is with uses for which potential consequences are severe • Zone includes all other portions of regular traffic patterns and pattern entry routes
Other Airport Environ /Horizontal Surface/Outer Conical Surface (Zone 7)	• Prohibit hazards to flight • Allow residential uses	• All areas outside Zones 1 through 6, but within AIA boundaries
High Terrain	• Same as underlying safety zone	

NOTES:
See Chapter 3 for airport-specific criteria, which may change or provide additions to these policies.
Refer to FAR Part 77, *Objects Affecting Navigable Airspace*, for specific airspace review and height limit guidelines.
Per State standards (Title 21, §5012), residential uses are not compatible within the 65 CNEL contour or higher .
Noise-sensitive (e.g., schools, hospitals, libraries, etc.), non-residential uses within the 65 CNEL contour, or higher, must have a maximum interior noise level of 45 dB.
Buyer Awareness notification required for the sale or lease of residential property within airport influence area, per Business Professional Code Section 11010 and Civil Code sections 1102.6, 1103.4, and 1353.
See Caltrans' *California Airport Land Use Planning Handbook* for additional guidance on safety and noise compatibility issues.

DEFINITIONS:
Allow: Use is acceptable.
Limit: Use is acceptable only if density/intensity restrictions are met.
Avoid: Use generally should not be permitted unless no feasible alternative is available.
Prohibit: Use should not be permitted under any circumstances.
Children's Schools: Through grade 12.
Large Day Care Centers: Commercial facilities as defined in accordance with state laws; for the purposes here, family day care homes and noncommercial facilities ancillary to a place of business are generally allowed.
Aboveground Bulk Storage of Fuel: Tank size greater than 6,000 gallons (this suggestion is based on the Uniform Fire Code criteria which are more stringent for larger tank sizes).

SOURCE:
Caltrans, *California Airport Land Use Planning Handbook,* January 2002, Table 9B.

REFERENCES:
The risk factors presented here are derived from the *California Airport Land Use Planning Handbook*, and are intended to demonstrate the need for the safety criteria provided in Chapters 2 and 3 of this ALUCP.
Height limits and the review of objects in airport airspace is determined under the guidelines of Federal Aviation Regulation (FAR) Part 77: *Objects Affecting Navigable Airspace*.
Hazards to flight would include tall objects, visual and electronic forms of interference, and land use development that would attract wildlife hazardous to aircraft operations.

criteria for assessing whether a land use plan, ordinance, or development proposal is to be judged compatible with a nearby airport are set forth in this table. Additional factors pertaining to the review of general plans, as detailed in Chapter 3, shall also be taken into account.

For the purposes of reviewing proposed amendments to county or city land use plans and zoning ordinances, as well as in the review of most individual development proposals, the criteria in the summary table are anticipated to suffice. However, certain complex land use actions may require more intensive review. The ALUC may refer to the supporting criteria, as listed in Chapter 3, to clarify or supplement its review of such actions.

2.7.5.7 Special Conditions

a. Infill. Where development not in conformance with this ALUCP already exists, additional infill development of similar land uses may be allowed to occur even if such land uses are to be prohibited elsewhere in the AIA. The burden for demonstrating that a proposed development qualifies as infill rests with the project proponent and/or local jurisdiction.

   1. A parcel can be considered for infill development if it meets all of the following criteria plus the applicable provisions of either Sections 2.7.5.7(a)(2) or 2.7.5.7(a)(3) below:

      i. The parcel size is 20 acres or less.

      ii. The site is at least 65% bound (disregarding roads) by existing uses that are similar to, or more intensive than, those proposed.

      iii. The proposed project would not extend the perimeter of the area defined by the surrounding, already developed, incompatible uses.

      iv. The area to be developed cannot previously have been set aside as open land in accordance with open land policies presented in Chapter 3 of this ALUCP unless replacement open land is provided within the same compatibility zone.

   2. For residential development, the density of the parcel proposed for development shall not exceed the following:

      i. For parcels of 10 acres or less, the density shall not exceed the median density represented by all existing lots that lie fully or partially within a distance of 300 feet from the defined infill area.

      ii. If the size of the parcel is greater than 10 acres (but no larger than 20 acres), then the development density shall be no greater than double the density permitted in accordance with the basic compatibility criteria listed in Table 3-2.

   3. For non-residential development:

      i. If the size of the parcel proposed for development is 10 acres or less, the usage intensity (the number of people per acre) of the proposed use shall be no greater than the average intensity of all existing uses that lie fully or partially within a distance of 300 feet from the boundary of the proposed development.

ii. If the size of the parcel proposed for development is greater than 10 acres (but no larger than 20 acres), the proposed use shall not have an intensity (the number of people per acre) more than 50% above the intensity permitted in accordance with the basic compatibility criteria listed in Table 3-2.

4. The burden for demonstrating that a proposed development qualifies as infill rests with the project proponent and/or local jurisdiction.

b. Nonconforming Uses. The ALUC has no authority over Existing Land Uses, including those that are not compatible with the criteria established in this ALUCP. Specifically, an ALUC cannot reduce or remove an incompatible land use from an airport's AIA. However, proposed changes to existing uses are subject to ALUC purview if those changes would result in an increase of nonconformity with ALUCP policies and the change would be an increase in the intensity or density of use beyond what is permitted by an Existing Land Use. Specified changes to nonconforming uses are limited as follows:

1. Residential Uses.

i. Nonconforming residential uses may be maintained, remodeled, reconstructed, or expanded in building size provided that the expansion does not result in more dwelling units than currently exist on the parcel. (Note: this policy does not apply to the construction of secondary, or in-law dwelling units.)

ii. A single-family residential parcel may not be divided for the purpose of allowing additional dwelling units to be constructed.

2. Nonresidential Uses.

i. Nonconforming nonresidential land uses may be maintained, altered, or reconstructed provided the following:

1. No expansion of the portion of the site devoted to the nonconforming use occurs unless the development qualifies as infill or warrants approval because of other special conditions.

2. No increase in the usage intensity above allowable levels for the safety zone in which the use is located occurs, unless the development qualifies as infill or warrants approval because of other special conditions.

3. Proposed expansion for reconstruction or modernization of non-conforming, but essential public services (e.g., water treatment plants, recycled water storage, flood control or water conveyance channels, and other public infrastructure projects necessary to maintain the health and safety of the public will be considered on a case-by-case basis by the ALUC.

3. Any proposed expansion of a nonconforming use (in terms of the number of dwelling units or people on the site) within Safety Zone 1 is prohibited. The expansion of a nonconforming use within safety zones 2 through 5 shall be subject to ALUC review. Factors to be considered in such reviews include whether the development qualifies as infill or warrants approval because of other special conditions.

c. Reconstruction. An existing nonconforming development that has been fully or partially destroyed may be rebuilt only under the following conditions:

1. Nonconforming residential uses may be rebuilt provided that the expansion does not result in more dwelling units than existed on the parcel at the time of the damage.
2. A nonconforming nonresidential development may be rebuilt, even if completely destroyed, provided that the reconstruction does not increase the floor area of the previous structure or result in an increased intensity of use (i.e., more people per acre).
3. Nothing in Sections 2.7.5.7(c)(1) through 2.7.5.7(c)(2) is intended to preclude work required for normal maintenance and repair.

d. Development by Right. Nothing in these policies prohibits construction or alteration of a single-family home on a legal lot of record if such use is permitted by local land use regulations. Construction of other types of uses also may proceed if local government approvals, based upon previous ALUC compatibility criteria and project review, effectively qualify the development as existing.

e. Parcels Lying within Two or More Compatibility Zones. Parcels located within two or more safety zones shall be considered divided at the safety zone boundary line.

1. If no part of the building(s) proposed on the parcel fall within the more restrictive safety zone, the criteria for the safety zone where the proposed building(s) are located shall apply for the purposes of evaluation.
2. If the building(s) proposed on the parcel fall within multiple safety zones, the criteria for the most restrictive safety zone where the building(s) proposed are located shall apply for the purposes of evaluation.
3. The ALUC can consider less restrictive options on a case-by-case basis if special conditions or design criteria are applied to the proposed project. These special conditions may include:
   i. Maintaining adequate open space for emergency landings (0.5 acre of parcel);
   ii. Clustering of development; and
   iii. Any other criteria, as identified by the ALUC, and agreed upon by the applicant and/or jurisdiction as a condition of approval.

f. Other Special Conditions. The compatibility criteria set forth in this plan are intended to be applicable to all locations within each AIA. However, it is recognized that there may be specific situations where a normally incompatible use can be considered compatible because of terrain, specific location, or other extraordinary factors or circumstances related to the site.

1. After due consideration of all the factors involved in such situations, the ALUC may find a normally incompatible use to be acceptable.
2. In reaching such a decision, the ALUC shall make specific findings as to why the exception is being made and that the land use will not create a safety hazard to people on the ground or aircraft in flight nor result in excessive noise exposure for the proposed use. Findings also shall be made as to the nature of the extraordinary circumstances that warrant the policy exception.
3. The burden for demonstrating that special conditions apply to a particular development proposal rests with the project proponent and/or the referring agency, not with the ALUC.
4. The granting of a special conditions exception shall be considered site specific and shall not be generalized to include other sites.

5. Special conditions that warrant general application in all or part of the AIA of one airport, but not at other airports, are set forth in Chapters 3 of this ALUCP.

This page left intentionally blank.

CHAPTER 3
Livermore Municipal Airport Policies

3.1 Purpose and Scope

Chapter 3 of the Airport Land Use Compatibility Plan (ALUCP) for Livermore Municipal Airport (LVK) presents the criteria, maps, and policies to be utilized by the Alameda County Airport Land Use Commission (ALUC) and other local jurisdictions. These policies shall apply when reviewing proposals for land use development within the airport influence area (AIA) for compatibility with airport operations. The ALUC and affected cities within the AIA shall also use these policies when modifying respective general plans, zoning ordinances, and other local land use policies. The authority for such reviews derives from the California State Aeronautics Act (Public Utilities Code, Section 21670 *et seq*.).

This ALUCP is based on the LVK's most recent Airport Layout Plan (ALP), which depicts both near term and future aviation and non-aviation related facilities. While State law (PUC Section 21675(a)) normally requires that data included in an ALUCP address the anticipated growth of an airport over a minimum of a 20-year period following publication, a state law provision allowing an ALUC's compatibility plan to be based upon an airport layout plan, with the approval of the Division of Aeronautics, was added in 1990. The *Livermore Municipal Airport Master Plan* was last updated in 1975. Due to its age, the City rescinded the document in March of 2010, and development at LVK is now guided by the General Plan, and the operation and development policies relevant to the Airport Zoning District in which LVK is located. Forecasts and noise contours developed and approved as part of the Livermore Municipal Airport General Plan Amendment and Rezoning (see Chapter 4) were utilized to create noise compatibility zones and policies.

This ALUCP is intended to be used in conjunction with the countywide policies adopted by the ALUC, which are presented in Chapter 2 of this document.

3.1.1 Airport Influence Area

The airport influence area (AIA) is the area within which the ALUC is authorized to review local land use actions affecting the area, including adoption or amendments of general plans, specific plans, zoning ordinances, and building regulations. Figure 3-1 shows the AIA for LVK. The AIA was designated following an evaluation of political boundaries, noise contours, flight tracks, safety zones, and navigable airspace. The AIA extends west to Santa Rita Road, south to Stanley Boulevard. To the east, the limits of the AIA follow North Livermore Avenue, and to the north it

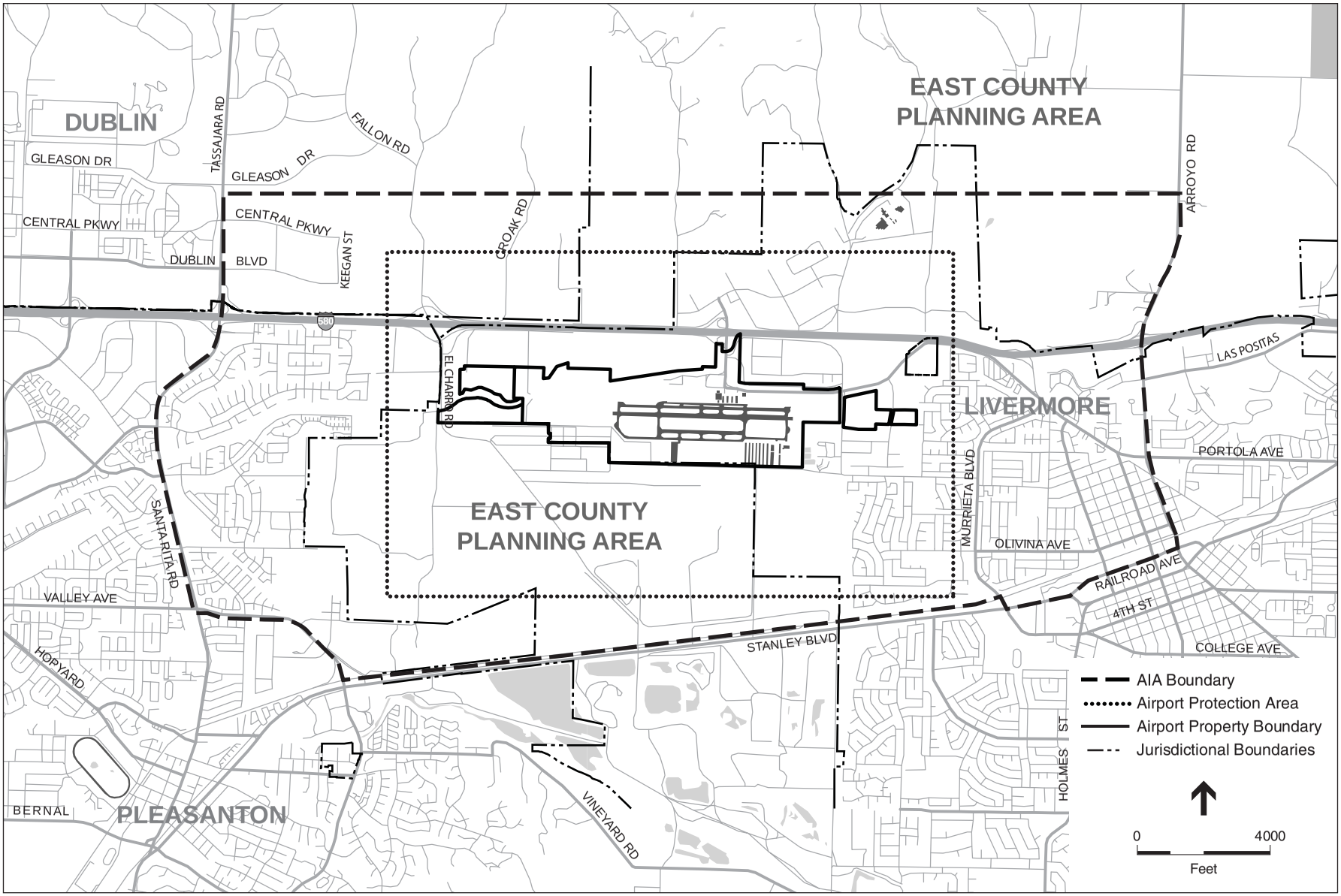

SOURCE: Alameda County, 1994; City of Pleasanton, 1996; City of Livermore, 2003; City of Dublin, 2006; and ESA, 2007

Figure 3-1
Airport Influence Area

extends from Tassajara Road to North Livermore Avenue. The AIA includes portions of the cities of Livermore, Pleasanton, Dublin, and unincorporated Alameda County.

3.1.2 Airport Protection Area

The Alameda County ALUC established the airport protection area (APA) in 1993, in order to prevent the encroachment of incompatible land uses near the vicinity of LVK. Criteria related to the APA are presented in Policy 3.3.2.6. The boundaries of the APA are as follows: 5,000 feet north from Runway 7L-25R; 5,000 feet south from Runway 7R-25L; 5,000 feet east from the end of Runway 25R; and 7,100 feet west from the end of Runway 7L (see Figure 3-1).

3.2 Compatibility Factors and Zones

3.2.1 Noise Compatibility Zones

The noise contours established for the purpose of evaluating the noise compatibility of land use development in the LVK airport influence area are depicted on Figure 3-2. As shown, the 55, 60, and 65 Community Noise Equivalent Level (CNEL) contours associated with the Airport Layout Plan (ALP) remain within the AIA. Table 3-1 identifies land uses that are compatible within the 65, 60 and 55 CNEL contours.

3.2.2 Safety Zones

To depict the relative risks of aircraft accidents near airport environs, the *California Airport Land Use Planning Handbook* (Caltrans, 2002) identifies a set of safety zones and the risk contours upon which they are based. The risk contours are derived from the accident location database described in the *Handbook* and show the relative concentrations of accidents near the ends of runways of different lengths. The safety zones are developed using this data and are created for varying runway lengths and operational characteristics, while at the same time taking into account aeronautical factors that affect where aircraft accidents are most likely to occur. Although the accident database is national in scope, the safety zones established for LVK are based on accident data from general aviation airports with similar operational characteristics (e.g., runway lengths, classes of aircraft flow, traffic patterns, etc.) as those found at the LVK.

A total of seven different safety zones are shown in Figure 3-3. The choice of safety zone criteria appropriate for a particular zone is largely a function of risk acceptability. For example, some land uses (e.g., schools and hospitals) represent intolerable risks when located near aircraft operation areas and are prohibited. Where the risks associated with a particular land use are considered significant but tolerable, restrictions may be established to reduce the risk to an acceptable level. Acceptable land uses generally require no limitations. (Table 3-2 presents a list of compatible land uses within each safety zone.)

3.2.3 FAR Part 77 (Airspace Protection)

The airspace protection zones established for the purpose of evaluating the airspace compatibility of land use development are depicted on Figure 3-4. The zones represent the imaginary surfaces defined for the Airport in accordance with Federal Aviation Regulation (FAR) Part 77. For more information about FAR Part 77 and airspace protection, refer to Appendix C.

3.2.4 Overflight Zones

The overflight zones established for the purpose of providing overflight notification for land uses near LVK are depicted in Figure 3-5. These zones are established to reflect standard traffic patterns and suggested approach and departure paths in the vicinity of LVK.

3.3 Compatibility Policies

3.3.1 Noise

3.3.1.1 Objective

Noise compatibility policies are established in order to prevent the development of noise-sensitive land uses in portions of the airport environ that are exposed to significant levels of aircraft noise.

3.3.1.2 Evaluation

The noise compatibility policies set forth in this section shall be used in conjunction with Figure 3-2 and Table 3-1 during the evaluation of proposed land uses within the AIA for LVK.

a. The criteria in this section indicate the maximum acceptable airport-related noise levels, which are measured in terms of CNEL, for a range of land uses.
b. Noise compatibility policies only apply to the identified noise contours. Within the identified noise exposure ranges, each land use type is shown as “compatible”, “conditional”, or “incompatible”. The meaning of these terms is provided in Table 3-1 and differ for indoor versus outdoor uses.
c. Land uses not specifically listed in Table 3-1 shall be evaluated using the criteria for similar listed uses.

3.3.1.3 Measurement

The magnitude of exposure experienced by land around LVK to airport-related noise shall be described in terms of CNEL.

a. The noise contours depict the greatest annualized noise impact, measured in terms of CNEL, anticipated to be generated by the airport over the planning timeframe, which in accordance with state law, extends at least 20 years into the future.
b. The noise contours depicted in Figure 3-2 were created for the 2010 Airport Rezoning and General Plan Amendment and utilized by this ALUCP for the purpose of establishing

the noise compatibility criteria herein. The ALUC should periodically review the projected CNEL contours and update them if and when appropriate.

c. The threshold for evaluation is the projected 55 dB CNEL contour. All proposed land use changes that would sustain noise exposure at a level that is less than 55 CNEL are considered consistent with the noise compatibility policies.

3.3.1.4 Factors Determining Noise Criteria

The factors considered during the development of noise criteria include the following:

a. Established federal and state regulations and guidelines;

b. Established local noise-abatement policies, general and specific plan policies;

c. The degree to which noise would affect the activity associated with a particular land use, and ordinances; and

d. The extent of outdoor activity associated with a particular land use.

3.3.1.5 Appropriate Noise Levels for Specific Types of Land Use Development

a. The maximum CNEL considered unconditionally acceptable for new residential uses in the vicinity of LVK is 59-64 dB, depending upon the type residential land uses in accordance with Table 3-1.

b. The compatibility of new nonresidential development with noise levels generated by the Airport is indicated in Table 3-1.

   1. Buildings associated with land uses listed as “conditional” must have added sound attenuation as necessary to meet the interior noise level standards indicated in Table 3-1 and in Policy 3.3.1.6.

   2. Land uses not specifically identified shall be evaluated using the criteria for listed land uses of a similar nature.

3.3.1.6 Interior Noise Levels

Within all identified noise contours, land uses for which interior activities may be easily disrupted by noise shall be required to comply with the following interior noise level criteria:

a. A maximum, aircraft-related, interior noise level of 45 dB CNEL shall be considered acceptable for the following (calculations should assume windows are closed):

   1. Living and sleeping areas of single- or multi-family residences;

   2. Hotels and motels;

   3. Hospitals and nursing homes;

   4. Churches, meeting halls, office buildings, and mortuaries; and

   5. Schools, libraries, and museums.

   Calculations should assume that windows are closed.

b. The maximum, aircraft-related, interior noise level which shall be considered acceptable for the following land uses is 50 dB CNEL in (calculations should assume windows are closed):

1. Office environments;
2. Eating and drinking establishments; and
3. Other miscellaneous commercial facilities.

c. When reviewed as part of a general plan or zoning ordinance amendment or as a major land use action, evidence that proposed structures will be designed to comply with these criteria shall be submitted to the ALUC under the following circumstances:

1. Any hotel or motel, hospital or nursing home, church, meeting hall, office building, mortuary, school, library, museum, or other noise-sensitve non-residential use within Noise Contours as identified in Figure 3-2.

3.3.1.7 Engine Run-Up and Testing Noise

ALUC consideration of noise from engine run-up and testing noise activities shall be limited as follows.

a. Aircraft noise associated with pre-flight engine run-ups, taxiing of aircraft to and from runways, and other operation of aircraft on the ground is considered part of airport operations and is not subject to ALUC regulation. (Engine testing noise is not normally included in the noise contours prepared for an airport and has not been considered in preparation of the noise contours presented in Figure 3-2). However, the ALUC may consider noise from these sources when reviewing the compatibility of proposed land uses to the extent that this noise is reflected in airport noise contours approved by the airport operator and the ALUC.

b. Noise from aircraft ground operations should be considered by the ALUC when reviewing airport master plans or development plans in accordance with the mandatory and voluntary review policies discussed in Chapter 2.

c. Noise from the testing of aircraft engines on airport property is not deemed an activity inherent in the operation of an airport, and it is not an airport-related impact addressed by this ALUCP. Noise from these sources should be addressed by the noise policies of local agencies in the same manner as noise from other industrial sources.

TABLE 3-1
NOISE COMPATIBILITY CRITERIA

Land Use Category[1]	Exterior Noise Exposure (dB CNEL)			
	<55	55-59	60-64	>65
Agricultural, Recreational, and Animal-Related				
Outdoor amphitheaters	P	P	P	X
Zoos; animal shelters; neighborhood parks; playgrounds	P	P	P	X
Regional parks; athletic fields; golf courses; outdoor spectator sports; water recreation facilities	P	P	P	C
Nature preserves; wildlife preserves; livestock breeding or farming	P	P	P	X
Agriculture (except residences and livestock); fishing	P	P	P	P
Residential, Lodging, and Care				
Residential, (including single-family and mobile homes)	P	P	C	X
Residential,(multi-family; retirement homes; residential; residential hotels)	P	P	P	X
Residential hotels; retirement homes; hospitals; nursing homes; intermediate care facilities	P	P	P	X
Hotels; motels; other transient lodging	P	P	P	X
Public				
Schools; libraries	P	P	P	C
Auditoriums; concert halls; indoor arenas; places of worship; cemeteries	P	P	P	P
Commercial and Industrial				
Office buildings; office areas of industrial facilities; medical clinics; clinical laboratories; commercial - retail; shopping centers; restaurants; movie theaters	P	P	P	C
Commercial - wholesale; research and development	P	P	P	C
Industrial; manufacturing; utilities; public rights-of-way	P	P	P	C

Land Use	Acceptability	Interpretation/Comments
P	Permitted	*Indoor Uses*: Standard construction methods will sufficiently attenuate exterior noise to an acceptable indoor community noise equivalent level (CNEL). *Outdoor Uses*: Activities associated with the land use may be carried out with essentially no interference from aircraft noise.
C	Conditional	*Indoor Uses*: Building structure must be capable of attenuating exterior noise to the indoor CNEL indicated by the number; standard construction methods will normally suffice. *Outdoor Uses*: CNEL is acceptable for outdoor activities, although some noise interference may occur; caution should be exercised with regard to noise-sensitive uses.
X	Incompatible	*Indoor Uses*: Unacceptable noise interference if windows are open; at exposures above 65 dB CNEL, extensive mitigation techniques are required to make the indoor environment acceptable for performance of activities. *Outdoor Uses*: Severe noise interference makes outdoor activities unacceptable.

Source: ESA, 2007; *California Airport Land Use Compatibility Handbook* (Caltrans, 2002); PUC 21001 *et seq.*, California State Aeronautics Act.

[1] Land uses not specifically listed shall be evaluated using the criteria for similar uses.

Note: The layout of this table was created using the framework developed in previous compatibility plans (Mead & Hunt, 2006).

3.3.2 Safety

3.3.2.1 Objective

Land use safety compatibility criteria are developed to minimize the risks to people and property on the ground as well as those people in an aircraft in the event of an accident or emergency landing occurring outside the airport boundary. Policies set forth in this section focus on reducing the potential consequences of such events when they occur. The most stringent land use controls will be applied to the areas with greatest risk potential.

3.3.2.2 Evaluation

The safety compatibility of proposed uses within LVK's AIA should be evaluated in accordance with the policies set forth in this section, including the safety zones presented on Figure 3-3 and the criteria listed in Table 3-2.

a. The criteria in Table 3-2 indicate whether a particular type of land use is "compatible", "conditional", or "incompatible" with the exposure to aircraft accident risks. The meaning of these terms is provided in the table.
b. Land uses not specifically listed should be evaluated using the criteria for similar listed uses.

3.3.2.3 Measurement

The concept of risk is essential to maintaining a high degree of safety in an airport environment. For the purposes of this ALUCP, the risk that potential aircraft accidents pose to land around LVK shall be defined in terms of the geographic distribution of where accidents are most likely to occur. Due to the infrequency of aircraft accidents, the pattern of accidents at any one airport cannot be used to predict where future accidents are most likely to occur around a particular airport. The safety zones depicted in the *California Airport Land Use Compatibility Handbook* (*Handbook*), and upon which the safety zones in the ALUCP are based, were formulated using the accident distribution patterns presented in the *Handbook* for similar general aviation airports nationwide.

However, state law provides that ALUCs, while required to be guided by the Handbook, may develop height restrictions on buildings, specify use of land, and determine building standards, including soundproofing adjacent to airports within the AIA (per PUC §21675(a)). The ALUC will also take into consideration the type of and location of proposed land uses apart from aircraft accident distribution patterns within the AIA, in order to minimize exposure to excessive noise and safety hazards within areas around LVK to the extent that the areas are not already devoted to incompatible uses, and to safeguard against safety problems related to airport use.

3.3.2.4 Factors Determining Safety Criteria

In determining criteria for each safety zone and the overall approach to this compatibility factor, the following issues were considered:

a. Locations, delineated in respect to the runway, where aircraft accidents near general aviation airports typically occur. The most stringent land use controls will be applied to the areas where the greatest risk of aircraft accidents is likely to occur (as delineated by the Caltrans Handbook), or where land uses put vulnerable populations at an intolerable risk from potential aircraft accidents.

b. Runway length and approach categories for each runway at LVK. These factors are reflected in the safety zone shapes and sizes, and are based upon zones suggested in the Caltrans Handbook.

c. Encroachment of incompatible land uses. The Caltrans Handbook suggests that, "because many general aviation airports are located on the fringes of urban areas, both the threat of new incompatible development and the opportunity for ALUCs to help preserve a compatible airport land use relationship are great." The location of LVK among three thriving cities amplifies the need to strike a balance between making land use decisions that will benefit both local jurisdictions and the public airport serving them, while preserving the safety of the general public.

d. The ALUC recognizes buildings with higher and/or vulnerable populations present an added risk and are therefore, restricted within some safety zones. Where not restricted, the California Building Code (CBC) requires additional safety measures for these types of buildings.

3.3.2.5 Airport Safety Zones

A total of seven different safety zones were identified based on runway length and flight patterns (see Figure 3-3). As described above, the choice of safety zone criteria appropriate for a particular zone is largely a function of risk acceptability. Land uses (e.g., schools and hospitals) which, for a given proximity to the airport, are judged to represent intolerable risks must be prohibited. Where the risks of a particular land use are considered significant but tolerable, establishment of restrictions may reduce the risk to an acceptable level. Uses which are basically acceptable generally require no limitations.

In certain situations, the potential risk of an aircraft accident occurring in a location where large numbers of people assemble or have restricted mobility, such as sports stadiums, amphitheaters, etc., may be perceived as an intolerable risk no matter where it may be located within an AIA.

a. The following safety zones are identified for the purpose of presenting safety policies:

- Zone 1: Runway Protection Zones
- Zone 2: Inner Approach / Departure Zones
- Zone 3: Inner Turning Zones
- Zone 4: Outer Approach / Departure Zones
- Zone 5: Sideline Zones
- Zone 6: Traffic Pattern Zone
- Zone 7: Other Airport Environs outside of Zones 1 – 6, but within the AIA

3.3.2.6 Airport Protection Area (APA)

The boundaries of the APA around LVK are as follows (see Figure 3-1):

North Boundary: Running generally east to west, parallel to and extending north for a perpendicular distance of 5,000 feet from Runway 7L-25R.

South Boundary: Running generally east to west, parallel to and extending south for a perpendicular distance of 5,000 feet from Runway 7R-25L.

East Boundary: Running generally north to south, perpendicular to and extending 5,000 feet east from the east end of Runway 7L-25R.

West Boundary: Running generally north to south, perpendicular to and 7,100 feet west from the west end of Runway 7L-25R.

New residential land use designations, or the intensification of existing residential land uses, are prohibited within the APA. Nonresidential land uses may be allowed within the APA insofar as they are consistent with the criteria set forth in Policy 3.3.2.8 of this compatibility plan.

Should the City of Livermore, after adoption of this ALUCP, modify City of Livermore Resolution 192-91, which establishes the APA, or adopt a new Resolution, the ALUC shall acknowledge the modification of the APA for purposes of transit-oriented residential development around the future Isabel/I-580 BART station in subsequent land use reviews, and shall revise this policy at the earliest possible date as provided by state law.

3.3.2.7 Residential Development Criteria

The development of new residential land uses must be restricted in the following ways:

a. Except for those portions of Zone 4 outside the APA (see Policy 3.3.2.7(b)), neither new residential land uses, nor the intensification of Existing Land Uses shall be allowed within Zones 1 through 5, with the exception of the construction of a secondary dwelling unit.
b. Within those portions of Zone 4 that extend beyond the eastern boundary of the APA, new residential developments are required to meet the maximum intensities identified for both single-family and multi-family residential uses indicated in Table 3-2.
    1. Infill is allowed up to an average of the surrounding residential use, provided that other safety criteria identified in this plan are satisfied. Preserving the minimum amount of open space (as defined in Policy 3.3.2.12) is also encouraged.
c. Land uses shown as “conditional” should comply with all relevant criteria applied to the particular safety zone(s) in which they are proposed, as well as the conditions listed below.
    1. Land uses within safety zones 3 and 4 should be clustered, to the greatest extent practical, to preserve open space as specified in Table 3-2. (See Policy 3.3.2.11 for clustering criteria.)

2. For Conditional Uses located in Safety Zones 2 through 5 that are not Existing Land Uses, ALUC review is requested in an ADVISORY-ONLY capacity, even if the proposed land use is considered consistent with an adopted general or specific plan. (See Policy 2.6.1. Actions Requiring ALUC Review and 2.7.3.1 Initial Review of General Plan Consistency.)
3. An ALUC Advisory-Only review shall consist of the following:
    i. Review of project by ALUC staff and Commission at the next regularly scheduled meeting. The purpose of the meeting is to identify any design or locational strategies that could improve the survivability of building inhabitants in the event of an aircraft collision. Such features may include allowing fewer people per acre (site-wide average) than what is allowed for that particular safety zone, project relocation, clustering development to preserve open space, or other features that may be identified by the applicant, jurisdiction, or ALUC.
    ii. Conditions will be considered to be met upon the completion of project review by the ALUC, which includes an adopted resolution identifying any features recommended for incorporation by the jurisdiction with ultimate approval authority (e.g., Planning Commission, City Council, or Special District Board).

d. Secondary units, as defined by state law, shall be not be included in density calculations, and may be constructed on existing, non-conforming residential parcels.
e. No restrictions on residential development shall apply to the portions of Zones 6 and 7 that extend beyond the boundary of the APA.

3.3.2.8 Nonresidential Development Criteria

The following criteria apply to most proposed nonresidential development. Separate or additional criteria for land uses of special concern are described in Policy 3.3.2.9. For the purposes of the ALUCP, the primary measure of risk exposure for people on the ground in the event of an aircraft accident is the number of people concentrated in areas most susceptible to aircraft accidents.

a. With respect to the vicinity of LVK, the maximum acceptable intensity of new nonresidential development, including all people (e.g., employees, customers/visitors) who may be at a particular location at any single point in time, both indoors and outdoors, shall be limited to the intensities indicated in Table 3-2. Nonresidential intensity criteria derive from both the intensities for “rural/suburban” and “urban” settings (as set forth in Table 9C of the Caltrans Handbook), which reflects the current environment around LVK.
b. The compatibility of a proposed nonresidential land use shall be evaluated using the land use types listed in Table 3-2.
    1. The nonresidential uses are categorized primarily with respect to the typical occupancy load factor of the use measured in terms of square footage per occupant.
    2. Proposed development not listed in Table 3-2 shall be evaluated by comparison to a similar use on the list.
c. Land uses shown as “conditional” should comply with all relevant criteria applied to the particular safety zone(s) in which they are proposed, as well as the conditions listed below.

1. Land uses within safety zones 2 through 5 should be clustered, to the greatest extent practical, to preserve open space as identified in Table 3-2. (See Policy 3.3.2.11 for clustering criteria.)
2. For Conditional Uses in Safety Zones 2 through 5 that are not Existing Land Uses, ALUC review is requested in an ADVISORY-ONLY capacity, even if the proposed land use is considered consistent with an adopted general or specific plan. (See Policy 2.6.1. Actions Requiring ALUC Review and 2.7.3.1 Initial Review of General Plan Consistency.)
3. An ALUC Advisory-Only review shall consist of the following:
    i. Review of project by ALUC staff and Commission at the next regularly scheduled meeting. The purpose of the meeting is to identify any design or locational strategies that could improve the survivability of building inhabitants in the event of an aircraft collision. Such features may include allowing fewer people per acre (site-wide average) than what is allowed for that particular safety zone, project relocation, clustering development to preserve open space, or other features that may be identified by the applicant, jurisdiction, or ALUC.
    ii. Local jurisdictions may make exceptions for rare, special events for which a facility is not designated and normally not used and for which extra safety precautions can be taken as appropriate.
4. Conditions will be considered to be met upon the completion of project review by the ALUC, which includes an adopted resolution identifying any design features recommended for incorporation by the jurisdiction with ultimate approval authority (e.g., Planning Commission, City Council, or Special District Board).

d. Land uses listed as “incompatible” should not be permitted to be developed within the indicated safety zones.

3.3.2.9 Land Uses of Particular Concern

The land uses that pose the greatest concern are those in which the occupants have reduced mobility or are unable to respond in emergency situations. Children’s schools, day care centers, hospitals, nursing homes, and other uses in which the majority of occupants are children, elderly, the ill or infirm, and/or handicapped shall be prohibited within Zones 1 through 5. Children’s schools are also prohibited in Safety Zone 6.

a. For the purposes of these criteria, children’s schools include all grades through grade 12.
b. Day care centers and family day care homes are defined by state law. Non-commercial day care centers ancillary to a place of business are permitted in Zones 6 and 7 provided that the overall use of the property meets the intensity criteria indicated below. Family day care homes are permitted in any location where residential development is permitted.
c. In-patient health care facilities include hospitals, health care facilities, and other types of non-ambulatory medical centers. Land uses of these types are prohibited in Safety Zones 1 through 5, conditional in Zone 6, and permissible in and 7.
d. Out-patient health care facilities such as health care centers, clinics, dentists’ offices, and other types of ambulatory facilities are conditionally acceptable in Safety Zone 3 and 4.
e. Storage fuel and other hazardous materials within the airport environs are restricted as follows:

1. Within Zones 1 and 2, storage of any such substance is prohibited.
2. Within Zone 3, storage of fuel or other hazardous materials is permitted only if the substances are stored in underground tanks, and the quantity stored is no more than 2,000 gallons.

f. Land uses shown as "conditional" should comply with all relevant criteria applied to the particular safety zone(s) in which they are proposed, as well as the conditions listed below.

1. Land uses within safety zones 2 through 4 should be clustered, to the greatest extent practical, to preserve open space as specified in Table 3-2. (See Policy 3.3.2.11 for clustering criteria.)
2. For Conditional Uses located in Safety Zones 2 through 7 that are not Existing Land Uses, ALUC review is requested in an ADVISORY-ONLY capacity, even if the proposed land use is considered consistent with an adopted general or specific plan. (See Policy 2.6.1. Actions Requiring ALUC Review and 2.7.3.1 Initial Review of General Plan Consistency.)
3. An ALUC Advisory-Only review shall consist of the following:
   i. Review of project by ALUC staff and Commission at the next regularly scheduled meeting. The purpose of the meeting is to identify any design or locational strategies that shall reduce or avoid harm to those on the ground resulting from a potential aircraft accident. Such features may include allowing fewer people per acre (site-wide average) than what is allowed for that particular safety zone, clustering development to preserve open space, or other features that may be identified by the applicant, jurisdiction, or ALUC.
   ii. Conditions will be considered to be met upon the completion of project review by the ALUC, which includes an adopted resolution identifying any design features recommended for incorporation by the jurisdiction with ultimate approval authority (e.g., Planning Commission, City Council, or Special District Board).

g. Land uses listed as "incompatible" should not be permitted to be developed within the indicated safety zones.

h. Though no limit is placed on the intensity of new uses within Safety Zones 6 and 7, exceptions to these criteria should be considered on a case-by-case basis by the ALUC when reviewing development proposals that entail large indoor or outdoor assembly facilities.

3.3.2.10 Mixed-Use Development

If a combination of land use types listed separately in Table 3-2 might be proposed for a single project or site, the following policies would apply:

a. Mixed-use development involving new or intensified residential land uses within the designated APA is prohibited.

b. Where residential and nonresidential uses are proposed to be located in the same or nearby buildings, both residential and nonresidential density criteria must be met. The number of dwelling units shall not exceed the density limits indicated in Table 3-2. Both occupancy totals (residential and nonresidential) will be considered with respect to the nonresidential usage intensity criteria cited in the table.

1. Except as designated below in Paragraph (2), this mixed-use development criterion is intended for suburban developments where the overall usage intensity and ambient noise levels are relatively high.
2. Mixed-use development is prohibited where the residential component would be exposed to noise levels above the limits set in Policy 3.3.1.5.

c. Where proposed development will contain a mixture of nonresidential land uses as identified in Table 3-2, the total number of occupants for all the uses shall be added to determine the total number of people on the site. The total number of occupants on the site shall not exceed the maximum set forth in Table 3-2.

1. The number of people for each component use shall be estimated to equal the square footage of that use divided by the occupancy load factor (square footage per person) cited in Table 3-2.
2. If an occupancy load factor is not provided for a component use, the number of occupants may be estimated by using parking space requirements of the affected jurisdiction.

3.3.2.11 Criteria for Clustering of Development

a. The ALUC generally supports clustering as a means for both enhancing safety compatibility in the vicinity of airports and accomplishing other development objectives. Clustering occurs when development is concentrated on one portion of a site or within an overall safety zone, leaving other areas as open space. If the area remaining undeveloped is relatively level and free of large obstacles, clustering potentially allows a greater amount of open space towards which a pilot can land the aircraft if needed; thus reducing the risk of harm to people on the ground. However, an aircraft still has the potential to strike a clustered site, and as such, limitations on the maximum concentrations of dwellings or people in a small area of a large project site are appropriate.

b. No development shall be clustered in a manner that would exceed the intensity limits listed as incompatible in Table 3-2.

3.3.2.12 Open Land

In the event of an emergency landing, risks to both people in the aircraft and on the ground can be minimized by providing as much open land as possible in the vicinity of the airport. The following open land policies are considered recommendations, and generally only applicable to development projects of five acres or more.

a. To be considered “open land”, an area should:

1. Be free of obstacles such as large trees, walls, or poles, and overhead wires.
2. Have minimum dimensions of approximately 0.5 acres in size.

b. Open land areas should be oriented with the typical direction of aircraft flight over the location in question.

c. Roads and automobile parking areas are considered acceptable as open land areas.

d. Open land should not preserve or create habitat that could pose hazards to aircraft. For example, wildlife refuges, mitigation banks, wetlands, and other uses that provide habitat or food sources for birds or other wildlife that are hazardous to aircraft operations.

e. Clustering of development, as detailed in Policy 3.3.2.11 above, is encouraged as a means of increasing the size of open land areas.

TABLE 3-2
SAFETY COMPATIBILITY CRITERIA

Land Uses	**Safety Compatibility Zones**						
	1	2	3	4	5	6	7
Maximum Site-wide Average Non-Residential Intensity (People/Acre)	10	40	80	100	100	No Limit	No Limit
Recommended Open Land	100%	40%	30%	20%	20%	0%	0%
Non-Residential Land Uses							
➢ Note: Where uses are listed as "C"-Conditional, please refer to Section 3.3.2.8(c).							
Offices *(approx. 215 s.f./person)*	X	C	C	C	C	P	P
Small eateries/drinking establishments *(approx. 60 s.f./person)*	X	X	C	C	C	P	P
Medium sized business *(approx. 200 s.f./person)*	X	C	C	C	C	P	P
Mixed use retail centers with restaurant facilities (*approx. 110 s.f./ person*)	X	C	C	C	C	P	P
Retail center with no restaurant facilities (*approx. 170 s.f./ person*)	X	C	P	P	P	P	P
Residential Land Uses							
➢ Note: Where uses are listed as "C"- Conditional, please refer to Section 3.3.2.7(c)							
Short-term lodging Facilities (≤ 30 nights): hotels, motels, etc. (*approx. 200 s.f./person*)	X	X	C	C	X	P	P
Long-term lodging facilities (> 30 days): extended-stay hotels, dormitories, etc.	X	X	X	X	X	P	P
Single-family residential: detached dwellings, duplexes, townhomes, mobile homes	X	X	X	Zone 4: Incompatible at density > 4.5 d.u./ac	X	P	P
Multi-family residential: low-to-high density apartments, condominiums	X	X	X	Zone 4: Incompatible at density > 6.0 d.u./ac	X	P	P
Sensitive Land Uses (Land Uses of Particular Concern)							
➢ Note: Where uses are listed as "C"- Conditional, please refer to Section 3.3.2.9(f).							
Schools, K-12	X	X	X	X	X	X	P
Commercial Daycare (≥6)	X	X	X	X	X	C	P
Nurseries/In-home day care (≤14)	X	X	X	X	X	P	P
Inpatient facilities: hospitals, sanitariums, psychiatric facilities *(approximately 250 s.f./person)*	X	X	X	X	X	C	P
Outpatient facilities *(>5 patients):* dentist offices, clinics, etc. *(approximately 240 s.f./person)*	X	X	C	C	X	P	P
Congregate Care Facilities- ambulatory and non-ambulatory *(includes assisted living, convalescent/rehab facilities, retirement homes)*	X	X	X	X	X	C	P

TABLE 3-2
SAFETY COMPATIBILITY CRITERIA

Land Uses	Safety Compatibility Zones						
	1	2	3	4	5	6	7
Maximum Site-wide Average Non-Residential Intensity (People/Acre)	10	40	80	100	100	No Limit	No Limit
Recommended Open Land	100%	40%	30%	20%	20%	0%	0%
Correctional Facilities	X	X	X	X	X	C	P
High Capacity Indoor assembly room *(≥ 1,000 people)*	X	X	X	X	X	X	C
Medium to large indoor assembly room *(≥300. <1,000 people)*	X	X	X	C	X	C	C
Low capacity indoor assembly room *(≤ 300 people)*	X	X	C	C	X	C	P
Large outdoor assembly area *(≥1,000 people)*	X	X	X	X	X	X	C
Medium outdoor assembly area *(≥300, <999*)	X	X	C	C	X	P	P
Small outdoor assembly area (*≥50, ≤299*)	X	X	C	C	X	P	P
Manufacturing, R&D, Industrial Land Uses							
➢ Note: Where uses are listed as "C"-Conditional, please refer to Section 3.3.2.8(c).							
Manufacturing, research and development (*approx. 300 s.f./ person*)	X	X	C	C	C	P	P
Occupancies utilizing hazardous (flammable, explosive, corrosive, or toxic) materials	X	X	Zones 3 - 5: C "Conditional": Special measures to minimize risk in the event of an aircraft accident to be determined by permitting agencies.			P	P
Warehouses, distribution facilities (*approx. 500 s.f./ person*)	X	C	C	P	P	P	P
Storage of hazardous materials: gas stations, etc.	X	X	C	P	P	P	P
Repair garages not requiring use of flammable objects	X	P	P	P	P	P	P
Open parking garages	X	P	P	P	P	P	P
Private garages, carports, and agricultural buildings	X	P	P	P	P	P	P
Agriculture, Natural Features, Resource Operations							
➢ Note: These uses may attract birds or other wildlife considered potentially hazardous to flight. For uses listed as C-Conditional, please see Airspace Protection Policy 3.3.3.7(a)(5) and FAA Advisory Circular 150/5200-33B, located in Appendix C: FAA Airspace Protection Guidance. Commission review requested.							
Truck and specialty crops	X	X	X	X	X	P	P
Field and stalk crops	X	X	X	X	X	X	X
Pasture and range land	X	P	P	P	P	P	P
Orchards	X	X	X	X	X	X	P
Vineyards	X	X	X	X	X	C	P
Dry farm and grain	X	X	X	X	X	X	X
Tree farms, landscape nurseries,	X	X	C	C	X	P	P

TABLE 3-2
SAFETY COMPATIBILITY CRITERIA

Land Uses	Safety Compatibility Zones						
	1	2	3	4	5	6	7
Maximum Site-wide Average Non-Residential Intensity (People/Acre)	10	40	80	100	100	No Limit	No Limit
Recommended Open Land	100%	40%	30%	20%	20%	0%	0%
and greenhouses							
Fish farms	X	X	X	X	X	P	P
Feed lots and stockyards	X	X	X	X	X	P	P
Poultry farms	X	X	X	X	X	P	P
Dairy farms	X	X	X	X	X	P	P
Forest reserves	X	X	X	X	X	X	X
Fish and game reserves	X	X	X	X	X	X	X
Land reserves and open space	X	P	P	P	X	P	P
Waterways (rivers, creeks, swamps bays, lakes)	X	X	X	C	X	C	C
Reservoirs; quarry lakes; detention ponds; aquifer recharge; recycled water storage; flood control or water conveyance channels.	X	X	X	C	X	C	C
Utilities							
➢ Note: These uses may generate dust, smoke, thermal plumes, or other hazards to flight. These uses may attract birds or other wildlife considered potentially hazardous to flight. Power lines, smoke stacks, or other tall objects associated with these uses may be hazards to flight. For uses listed as C-Conditional, see Airspace Protection Policy 3.3.3.7(a)(5), and Section 3.3. Commission review requested.							
Water treatment	X	C	C	C	X	C	C
Electrical substations	X	X	C	X	P	P	P
Power plants	X	X	X	X	X	X	C
Power lines	X	X	X	X	X	P	P
Roadways	C	P	P	P	P	P	P
Other transit-oriented uses (train stations, bus stations, etc.)	X	C	P	P	P	P	P
Recreational Land Uses							
➢ Note: Golf courses and parks may attract birds or other wildlife considered potentially hazardous to flight. For uses listed as C-Conditional, see Airspace Protection Policy 3.3.3.7(a)(5), and Section 3.3. Commission review requested.							
Golf courses	X	X	X	X	X	X	C
Parks (playgrounds, picnic areas, athletic fields, tennis courts, etc.)	X	C	C	C	X	P	P
Riding stables and trails	X	P	P	P	P	P	P

Notes:

X – INCOMPATIBLE: Uses should not be permitted under any circumstances as they may expose persons to airport-related safety hazards.

C – CONDITIONAL: Uses or activities that may be compatible with airport operations depending on their location, size, bulk, height, density and intensity of use. See sections 3.3.2.7, 3.3.2.8, and 3.3.2.9 for conditional criteria on specific land uses.

P – PERMITTED: Uses or activities are compatible with airport operations, however, these activities should be reviewed to ensure that they will not create height hazard obstructions, smoke, glare, electronic, wildlife attractants, or other airspace hazards. Noise, airspace protection, and/or overflight policies may still apply.

All uses or activities identified in Table 3-2 are subject to intensity and density limitations as indicated. Particular attention should be given to developments that, when located in combination with other permitted or limited activities, may create cumulative impacts on airport operations. All uses should be reviewed to ensure that they will not create airspace hazards. Noise, airspace protection, and/or overflight policies may still apply.

3.3.3 Airspace Protection

3.3.3.1 Objective

Similar to safety policies, airspace protection criteria is intended to reduce the risk of harm to people and property resulting from an aircraft accident. This is accomplished by the establishment of compatibility policies that seek to prevent the creation of land use features that can be hazards to the airspace used by aircraft in flight and have the potential to cause an aircraft accident to occur. Such hazards may be physical, visual, or electronic.

3.3.3.2 Evaluation

Tall structures, trees, and other objects, or high terrain on or near airports, may constitute hazards to aircraft. Federal regulations establish the criteria for evaluating potential obstructions. These regulations require that the FAA be notified of proposals related to the construction of potentially hazardous structures. The FAA conducts "aeronautical studies" of proposed projects to determine whether they would pose risks to aircraft, but it does not have the authority to prevent their construction. The purpose of ALUC airspace protection policies, together with regulations established by local land use jurisdictions and the state government, is to ensure that hazards to the navigable airspace are avoided. The policies set forth in this section apply to the entire AIA.

3.3.3.3 Measurement

Federal Aviation Regulations (FAR) Part 77, *Objects Affecting Navigable Airspace*, provides guidance for the height of objects that may affect normal aviation operations (see Appendix C). The guidance provided by Part 77 is not absolute, however. Deviation from the Part 77 standards does not necessarily mean that a safety hazard exists, only that offending objects must be evaluated by the FAA and that mitigation, such as marking or lighting may be required if appropriate. Figure 3-4 depicts the Part 77 surfaces in the vicinity of LVK.

3.3.3.4 Factors Determining Airspace Protection Criteria

As described above, airspace protection policies rely upon regulation enacted by FAA and the state of California; ALUC policies are intended to help implement the federal and state regulations.

a. FAA has well-defined standards by which potential hazards to flight, especially airspace obstructions, can be assessed. However, FAA has no authority to prevent the creation of such hazards; that authority rests with state and local officials.

b. California airspace protection standards mostly mirror those of the FAA; the primary difference being that state law gives the California Department of Transportation, Division of Aeronautics and local agencies the authority to enforce the standards.

3.3.3.5 FAA Notification

Proponents of a project that may exceed the elevation of a Part 77 surface must notify the FAA as required by FAR Part 77, Subpart B, by the State Aeronautics Act, and by Public Utilities Code Sections 21658 and 21659.

a. Local jurisdictions shall inform project proponents of the requirements for notifying the FAA.

b. FAA review is required for any proposed structure more than 200 feet above the ground level of its site. All such proposals also shall be submitted to the ALUC for review regardless of where in the county the object would be located.

c. Any project submitted to the ALUC for airport land use compatibility review for reasons of height issues shall include a copy of FAR Part 77 notification to the FAA and the results of the FAA's analysis.

d. FAA notification shall not automatically trigger an airport compatibility review of a project by the ALUC, unless the general plan of the jurisdiction in which the project is located has not been deemed compatible with this ALUCP.

e. Jurisdictions or project proponents are encouraged to utilize guidance for the evaluation of projects within a civil airport's imaginary surfaces contained in Appendix C (see Section 77.19). Should further assistance be required in determining the potential for a proposed structure to penetrate LVK's imaginary surfaces, please contact the ALUC staff person, or airport manager.

3.3.3.6 Obstruction Marking and Lighting

FAA or the California Division of Aeronautics will determine the need for marking and lighting of an obstruction as part of aeronautical studies conducted in accordance with FAR Part 77. Under most circumstances, when reviewing proposed structures that exceed the height criteria, the ALUC is expected to abide by the FAA's conclusions regarding marking and lighting requirements. However, situations may arise in which the ALUC, because of its particular knowledge of local airports and airspace, may reach a different conclusion than that of the FAA. In such instances, the ALUC may determine either that a proposed structure is unacceptable or that it is acceptable only if marked and lighted. Any marking and lighting that the ALUC may require shall be consistent with FAA standards as to color and other features.

3.3.3.7 Other Flight Hazards

Land uses that may cause visual, electronic, navigational, or bird strike hazards to aircraft in flight shall be allowed within the airport influence area only if the uses are consistent with FAA rules and regulations, and/or have demonstrated consideration/application of appropriate FAA guidelines.

a. Specific characteristics to be avoided include:

    1. Glare or distracting lights that could be mistaken for airport lights;
    2. Sources of dust, heat, steam, smoke that may impair pilot vision;
    3. Sources of steam or other emissions that may cause thermal plumes or other forms of unstable air that generate turbulence within the flight path;
    4. Sources of electrical interference with aircraft communications or navigation; and
    5. Features that create an increased attraction for wildlife as identified in FAA rules, regulations, and guidelines including, but not limited to, FAA Order 5200.5A, *Waste Disposal Sites On or Near Airports*, and Advisory Circular 150/5200-33B, *Hazardous Wildlife Attractants On or Near Airports*. Land uses with the possibility

of attracting hazardous wildlife include landfills and certain recreational or agricultural uses that attract large flocks of birds.

b. Due to their propensity to generate smoke, steam, and other visual and physical hazards to aircraft in flight, power plants should be avoided in the AIA. However, given the varying types of power plants (i.e., thermal, solar farms, wind farms, etc.), proposed land uses of this type should be evaluated on a case-by-case basis, and in accordance with FAA criteria and the policies set forth in this Plan.

c. In order to resolve any uncertainties or differences with regard to the significance of the above types of flight hazards, local agencies should consult with FAA officials and LVK management.

3.3.3.8 Avigation Easement Dedication

Avigation easements transfer certain property rights from the owner of a property to the owner of the airport (i.e., the City of Livermore). ALUCs may recommend the dedication of an avigation easement as a condition for approval of development on property to restrict the heights of structures or trees. Avigation easements should be dedicated to the airport owner as a condition for any discretionary local approval of any residential or non-residential development within the area indicated on Figure 3-5.

a. The avigation easement shall:
    1. Identify the potential hazard associated with the proposed project and its location within protected airspace;
    2. Identify the airport owner's right to clear or maintain the airspace from potential hazards;
    3. Identify the right to mark potential obstructions and notify aviators of such hazards; and
    4. Provide the right to pass within the identified airspace.

b. Neither a separate overflight easement nor a separate real estate disclosure is required for properties for which an avigation easement is required.

c. An example of an avigation easement is provided in Appendix E.

3.3.4 Overflight

3.3.4.1 Objective

Noise from the overhead flight of aircraft can be annoying and intrusive in locations beyond the limits of the noise contours identified in Section 3.3.1. While sensitivity to aircraft overflights will vary from person to person, the basic intent of overflight policies is to warn people near an airport of the presence of aircraft so that they have the ability to make informed decisions regarding the acquisition or lease of property within the influence area of an airport.

3.3.4.2 Evaluation

Unlike other compatibility factors such as noise, safety, or airspace protection, overflight compatibility policies do not restrict how land can be developed or used; rather, the policies in this section form the requirements for notification about airport proximity and aircraft overflights.

These policies are to be applied by the ALUC when evaluating new development. The boundaries of the overflight zones around LVK are identified in Figure 3-5.

3.3.4.3 Measurement

Determining the boundaries of overflight noise exposure is difficult to determine as these locations extend well beyond the defined CNEL contours normally associated with areas of high noise exposure. The general locations over which aircraft routinely fly, including when they approach and depart an airport is generally used as an indicator of overflight annoyance concern. Furthermore, the FAA has determined that for the purposes of NEPA changes in Aircraft Flight tracks below 3,000 feet, AGL require more rigorous environmental review than those changes occurring above 3,000 feet AGL

3.3.4.4 Factors Determining Overflight Criteria

In determining the overflight criteria for LVK, the following factors were considered:

a. Limitations of ALUC authority of Existing Land Uses. In order to be most effective, overflight policies would ideally apply to all real estate transactions; existing and new. However, the ALUC only has authority to set requirements for new development and to define the boundaries within which real estate transfer disclosure under state law is appropriate.

b. Need for continuity of real estate disclosure to future property owners and tenants. It is recommended that real estate notifications run with the land and is provided to prospective future owners and tenants.

c. Excessiveness of avigation easement dedication used solely for buyer awareness purposes. Avigation easements require the conveyance of property rights from the owner to the party owning the easement, and as such, are best suited to locations where land use restrictions for noise, safety, or airspace protection is necessary.

3.3.4.5 Overflight Notification

As a condition for local agency approval of new residential land use development within the zone indicated on Figure 3-5, an overflight notification should be recorded.

a. The overflight notification should contain the language provided by state law with regard to real estate transfer disclosure (see Policy 3.3.4.6) and should be of a format similar to that indicated in Appendix E.

b. The notification should be evident to prospective buyers of the property and should appear with the property deed.

c. A separate overflight notification is not required where an avigation easement is provided.

d. Recording of an overflight notification is not required for nonresidential development.

3.3.4.6 Buyer Awareness Measures

Effective as of January 1, 2004, California state statutes (Business and Professional Code Section 11010 and Civil Code Sections 1102.6, 1103.4, and 1353) mandate that sellers or leasers of real property must disclose information regarding whether their property is situated within an AIA.

a. These state requirements apply to the sale or lease of newly subdivided lands and condominium conversions and to the sale of certain existing residential property.

b. Where disclosure is required, the state statutes dictate that the following statement shall be provided:

   NOTICE OF AIRPORT IN VICINITY

   This property is presently located in the vicinity of an airport, within what is known as an airport influence area. For that reason, the property may be subject to some of the annoyances or inconveniences associated with proximity to airport operations (for example: noise, vibration, or odors). Individual sensitivities to those annoyances can vary from person to person. You may wish to consider what airport annoyances, if any, are associated with the property before you complete your purchase and determine whether they are acceptable to you.

c. Although not mandated by state law, the recommendation of this ALUCP is that the airport proximity disclosure should be provided as part of all real estate transactions involving private property (both new and existing) within the airport influence area.

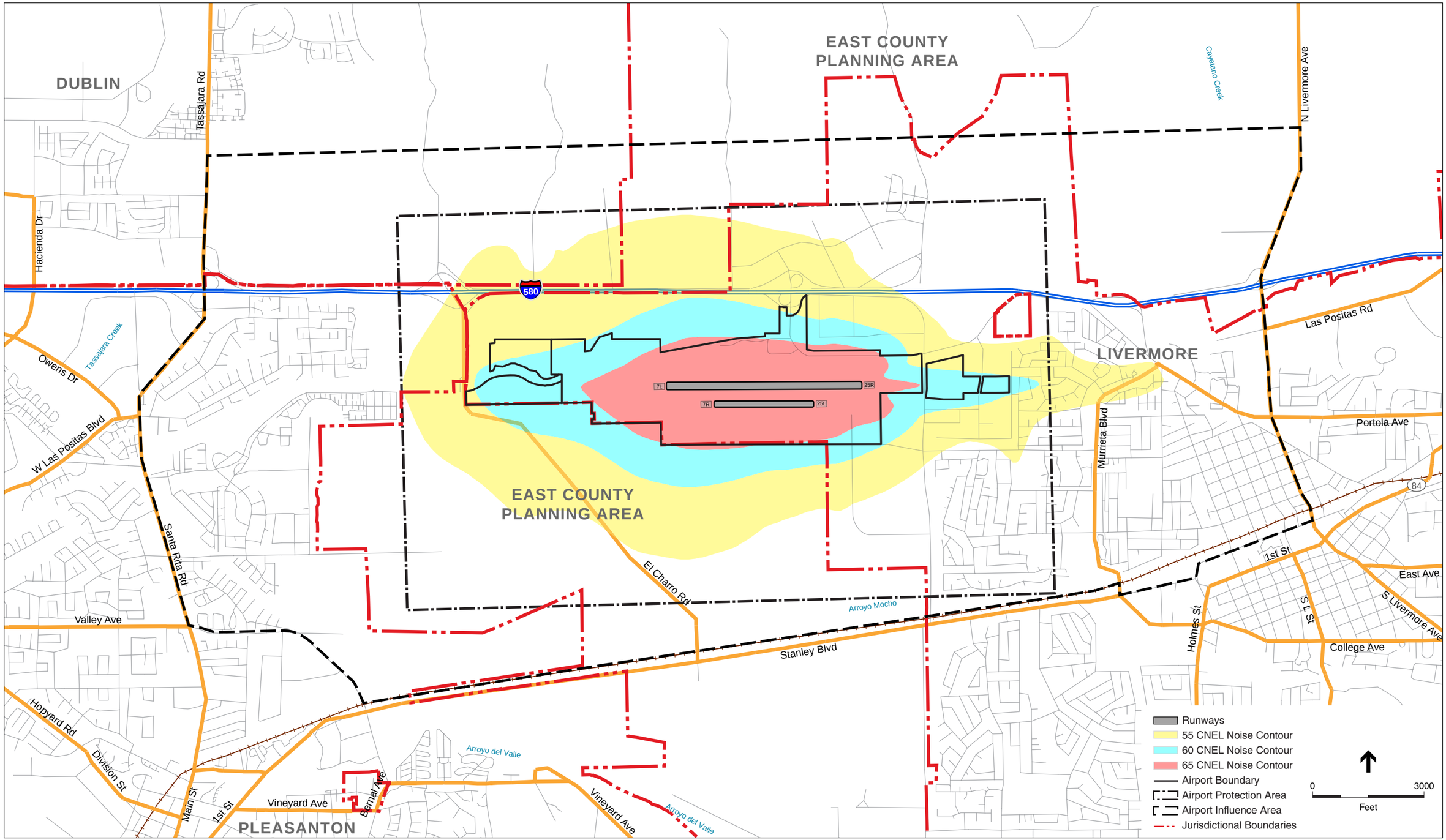

SOURCE: ESA Airports, 2009; ESRI, 2008; Brown-Buntin Associates, Inc., 2008; LSA Associates, Inc., 2009

Livermore Municipal Airport Land Use Compatibility Plan. 202229

Figure 3-2

Noise Compatibility Zones

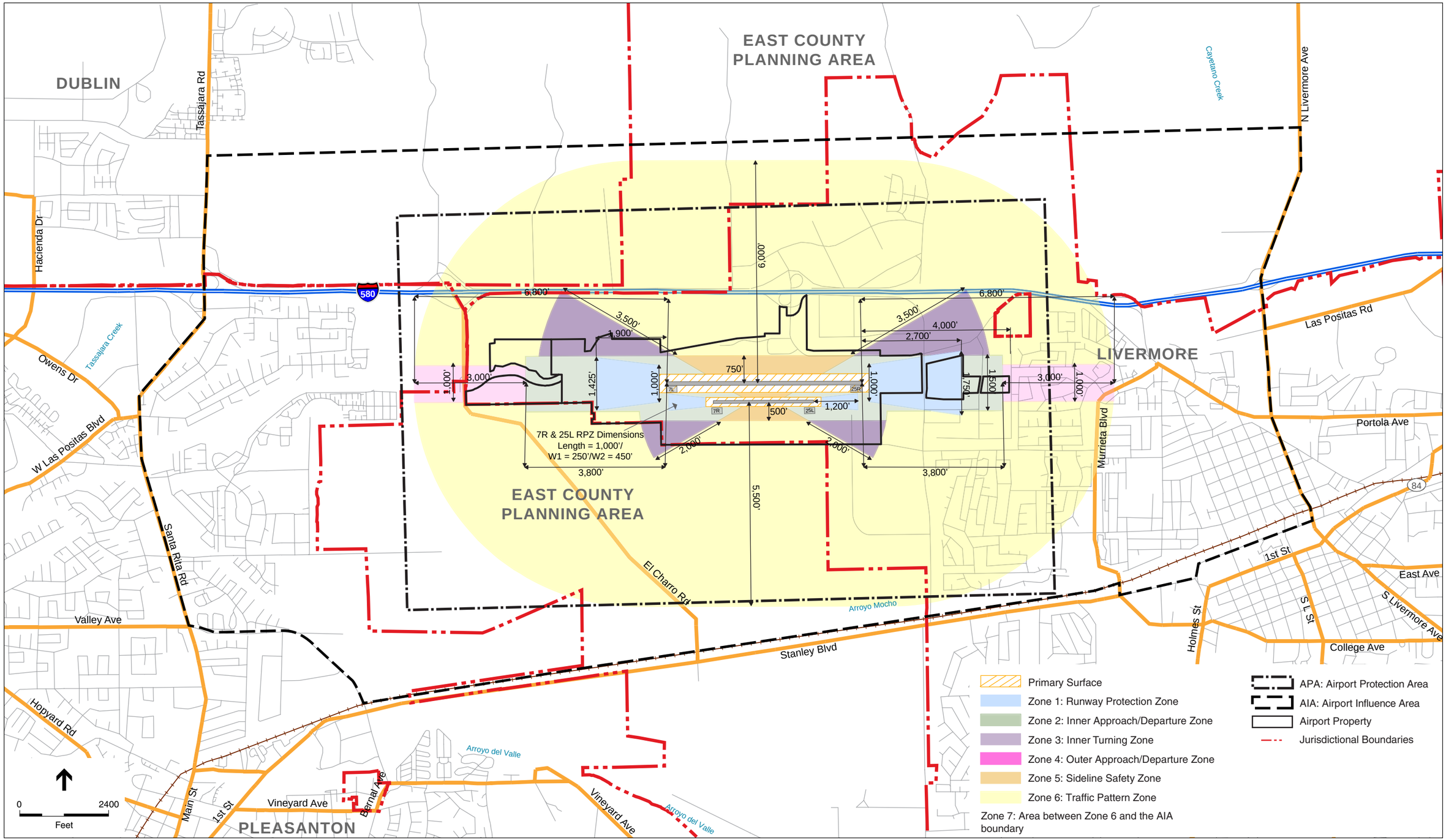

SOURCE: ESA Airports, ESRI, California Airport Land Use Planning Handbook (Caltrans, 2002)

Figure 3-3
Safety Compatibility Zones

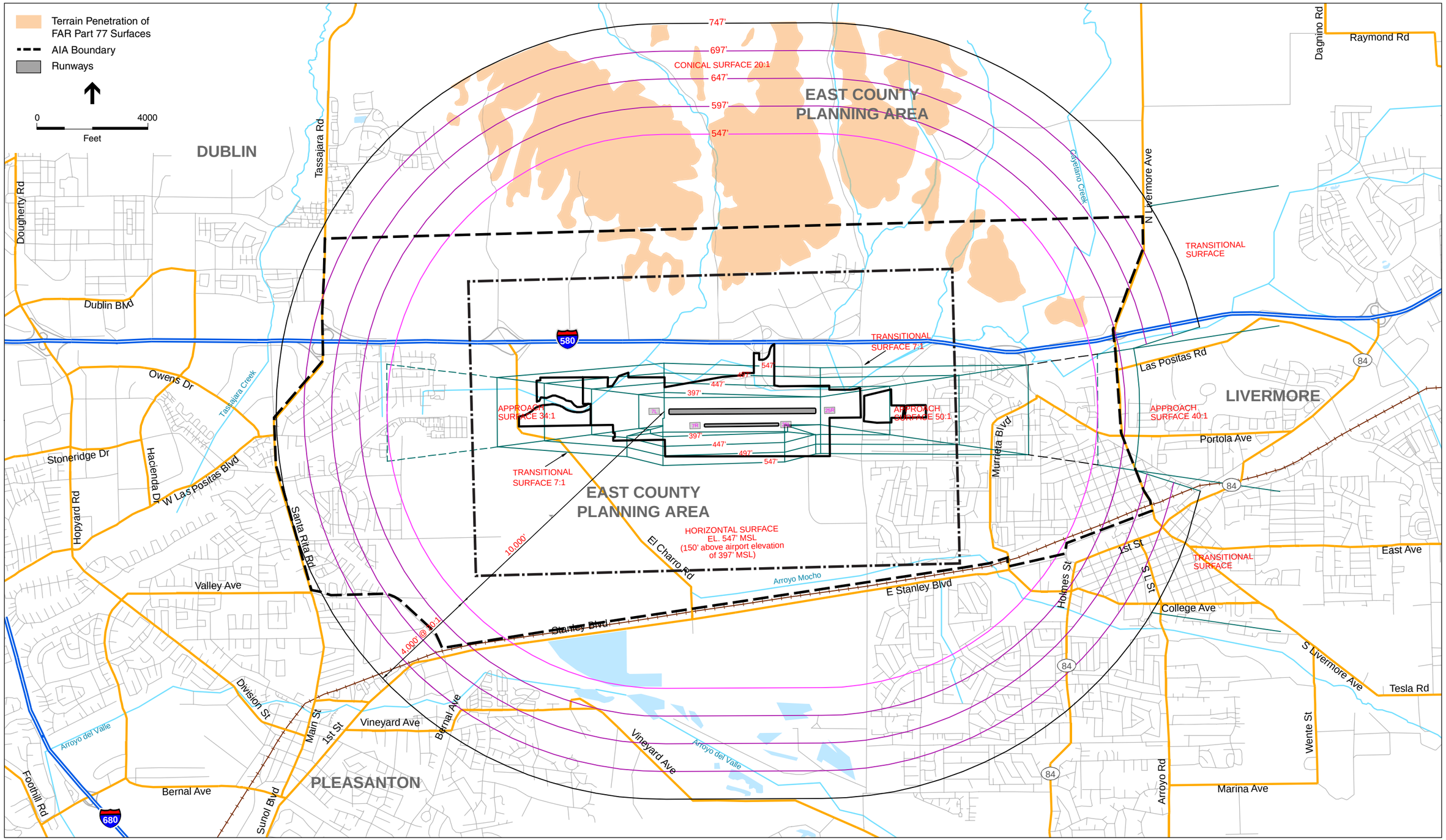

SOURCE: ESA Airports, ESRI, Livermore Municipal Airport Layout Plan, Mead & Hunt

Figure 3-4
FAR Part 77 Surfaces

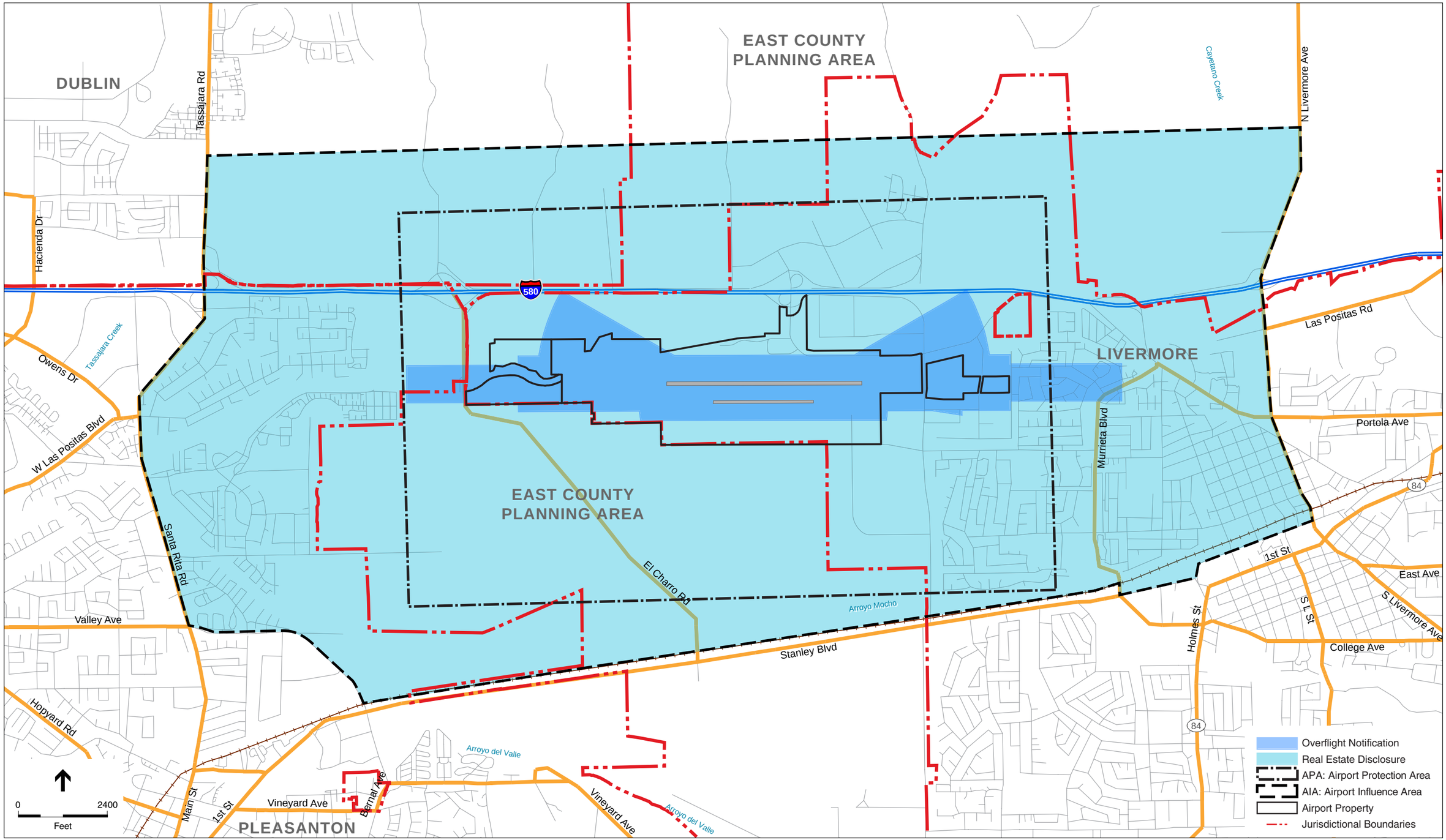

SOURCE: California Airport Land Use Planning Handbook (Caltrans, 2002); ESRI, 2007; and ESA, 2007

Livermore Municipal Airport Land Use Plan Update . 202229

Figure 3-5
Overflight Compatibility Zones

CHAPTER 4
Livermore Municipal Airport and Vicinity Data

4.1 Introduction

Livermore Municipal Airport (LVK) is located in Alameda County; approximately 30 miles east of the City of San Francisco (see Figure 1-1). The Airport is situated on the western end of the City of Livermore, a city of 83,604 residents as of 2011[1].

LVK was constructed as a private airfield in 1929. In 1942, the airport was converted into a federally owned, naval auxiliary airfield known as Livermore Sky Ranch. Following World War II, the City of Livermore operated the airfield under a lease with the Navy until 1953, when the city acquired the airfield. The airfield was relocated from its original location on Rincon Avenue to its present location off Airway Boulevard and opened in December of 1965. Multiple improvements were made to LVK; including hangars and T-shelters, an air traffic control tower, a precision instrument approach to Runway 25R, and an extension to the main runway.

4.2 Surrounding Airport Environs

4.2.1 Jurisdictions

LVK is owned and operated by the City of Livermore, as a division of the Public Works Department. Livermore Municipal Airport is located in the northwestern portion of the City of Livermore.

4.2.2 City of Livermore and Surrounding Land Uses

As shown in Figure 4-1, land uses in the vicinity of LVK include industrial/business parks, residential uses, and aggregate mining. In the City of Livermore, light industrial/business park land uses predominate to the north and west of the Airport. Residential development within the City of Livermore lies near the Airport to the east and southeast past Stealth Street and south of I-580. Extensive aggregate mining pits and associated ponds are located south and west of the airport. The Las Positas Municipal Public Golf Course is located northwest of airport property.

Approximately 1.5 miles west of the Airport is the City of Pleasanton's planning area of Stoneridge Drive, located east of El Charro Road, and south of I-580. This area includes segments of the residential neighborhood of California Somerset. Other Pleasanton neighborhoods within

[1] City of Livermore, 2012.

LVK's AIA include portions of the Rosewood and Mohr-Martin neighborhoods. North of I-580 and northwest of LVK is the East Dublin Planning Area, which includes a mix of residential, commercial and light industrial land uses. Policies and land use guidelines for these areas are contained within the *Pleasanton General Plan 2005 – 2025* (2009) and the *Stoneridge Drive Specific Plan Amendment/Staples Ranch* (City of Pleasanton, 2010), the *City of Dublin General Plan* (2006), the *City of Livermore General Plan* (2010), and the *El Charro Specific Plan* (2007).

As shown in Figure 4-2, the predominant zoning in the vicinity of LVK is open space, commercial, and planned development. Additional City of Livermore zoning districts in the LVK vicinity include light industrial/commercial to the north and east, and residential to the east and southeast. To the west, the portions of the City of Pleasanton within LVK's AIA are zoned mostly for residential and planned development, with some industrial to the southwest. North of I-580, in the City of Dublin, zoning in the AIA includes planned development, commercial, and residential.

4.2.3 Alameda County Land Uses

The East County Area (formerly known as the Livermore-Amador Valley Planning Unit) encompasses 418 square miles of eastern Alameda County and includes the cities of Dublin, Livermore, Pleasanton, and a portion of Hayward, as well as surrounding unincorporated areas. The planning area extends from the Pleasanton/Dublin ridgeline on the west to the San Joaquin County line on the east and from the Contra Costa County line on the north to the Santa Clara County line on the south.

Portions of this planning area within the AIA consist primarily of water and resource management land uses, though some industrial, mixed use, and rural density residential land uses are present. Land use policies for this area are contained within the *East County Area Plan* (Alameda County, 2002).

4.2.4 Noise-Sensitive Land Uses

The AIA for LVK includes portions of several residential subdivisions within the cities of Livermore, Dublin, and Pleasanton. Noise-sensitive land uses within the Livermore portion of the AIA include: Hagemann Park, May Nissen Park, R. Henry Maitland Park, Livermore Downs Park, Portola Park, Inman School, Rancho Las Positas Elementary School, Marylin Avenue School and Rincon Avenue School. Noise-sensitive land uses within the Pleasanton section of the AIA include: Orloff Park, Nielsen Park, Fairlands Park, Meadows Park, Fairlands Elementary School, and Pleasanton Urgent Care Medical Center.

4.2.5 Future Airport Vicinity Land Uses

LVK is located in the western portion of the City of Livermore, and the AIA includes portions of the cities of Livermore, Pleasanton, and Dublin, as well as unincorporated Alameda County. The City of Livermore and the Alameda County ALUC established the APA in 1993, which discourages encroachment of noise-sensitive uses such as residential or residential care facilities, to ensure that future land uses would be limited to light industrial, agriculture, and other uses which are considered "compatible" with airport operations. In compliance with APA policies, the *City of Livermore General Plan* identifies the goal of encouraging more compatible land uses, such as "light industrial and transportation uses", in the vicinity of the airport (see Section 4.3.1).

City of Pleasanton zoning within the AIA reflects the General Plan's approach towards the use of infill in areas adjacent to existing residential development. Therefore, the majority of the zoning within the Pleasanton portion of the AIA is "planned development" for low-density residential use. Planned industrial development is also identified in the General Plan near Stanley Boulevard and Valley Avenue.

A portion of the City of Dublin's East Dublin Planning Area is included in the AIA. This area extends east of Camp Parks to the edge of the city boundary. The General Plan targets the Eastern Dublin Planning Area as a major focal point for growth over the next 30 years, and this is reflected in the zoning, which designates the entire area as "planned development". The General Plan identifies the corridor along I-580 as an area for commercial and office/retail uses. To the north of I-580, the focus of the East Dublin Planning Area is a mix of medium- and low-density residential.

The *East County Area Plan* does not propose any specific changes to land use, but does encourage the use of infill for future residential development in the East County cities.

4.3 Land Use Planning and Regulations

The State of California requires all local governments to enact a general plan that establishes policies to guide future development of the city or county. The policies of the general plan are implemented through ordinances regulating development, including the zoning ordinance, which regulates the use of land, the density of development, and the height and bulk of buildings. Local governments also regulate development through building codes which set detailed standards for construction.

This section summarizes goals, objectives, and policies of the cities of Livermore, Pleasanton, and Dublin, and Alameda County that are applicable to the ALUCP.

4.3.1 City of Livermore General Plan (Amended Through 2010)

The *City of Livermore General Plan* was adopted in March 2004, with updates to various elements occurring most recently in 2010. The *General Plan Amendment* rescinded the 1975 *Livermore Municipal Airport Master Plan*, and in its place created an Airport (AIR) Zoning District

City of Livermore

- Government Services
- Airport
- Cemetery
- Elementary School
- Community College
- Fire Station
- Highway Commercial
- Office Commercial
- Neighborhood Commercial
- Service Commercial
- Downtown Area
- Neighborhood Mixed Medium Density
- Business and Commercial Park
- Low Intensity Industrial
- Rural Residential
- Urban Low Medium Residential (2-3 d.u./ac.)
- Urban Medium Residential (3-4.5 d.u./ac.)
- Urban High Residential (6-8 d.u./ac.)
- Urban Medium High Residential (4.5-6 d.u./ac.)
- Urban High Residential (8-14 d.u./ac.)
- Urban High Residential (14-18 d.u./ac.)
- Urban High Residential (18-22 d.u./ac.)
- Hillside Conservation
- Limited Agriculture
- Large Parcel Agriculture
- Parks, Trail ways, Recreation Corridors, Protected Areas
- Resource Managment

City of Pleasanton

- Public Heath and Safety
- Public and Institutional
- School-ES
- Commercial
- General and Limited Industrial
- Sand and Gravel Harvesting
- Low Density
- Medium Density
- Medium/High Density
- High Density
- Parks and Recreation
- Wildland Overlay
- Water Management and Recreation
- East Pleasanton Specific Plan

City of Dublin

- Campus Office
- Public/Semi-Public Facility
- Semi-Public
- Neighborhood Square
- Public/Semi-Public Facility
- Mixed Use
- General Commercial
- General Commerical/Campus Office
- Neighborhood Commericial
- Industrial Park
- Low Density Residential (0.0 - 6.0 du/ac)
- Medium-Density Residential (6.1 - 14.0 du/ac)
- Medium/High-Density Residential (14.1 - 25.0 du/ac)
- High-Density Residential (25.0 + du/ac)
- Parks/ Public Recreation
- Open Space
- Stream Corridor

Alameda County

- Mixed Use
- Industrial
- Large Parcel Agriculture
- Parklands
- Resource Management
- Water Management
- Urban Reserve

SOURCE: Alameda County, 2012; City of Livermore, 2012;
City of Pleasanton, 2012; City of Dublin, 2012;
National Geographic, 2012; and ESA Airports, 2012

Figure 4-1 Legend

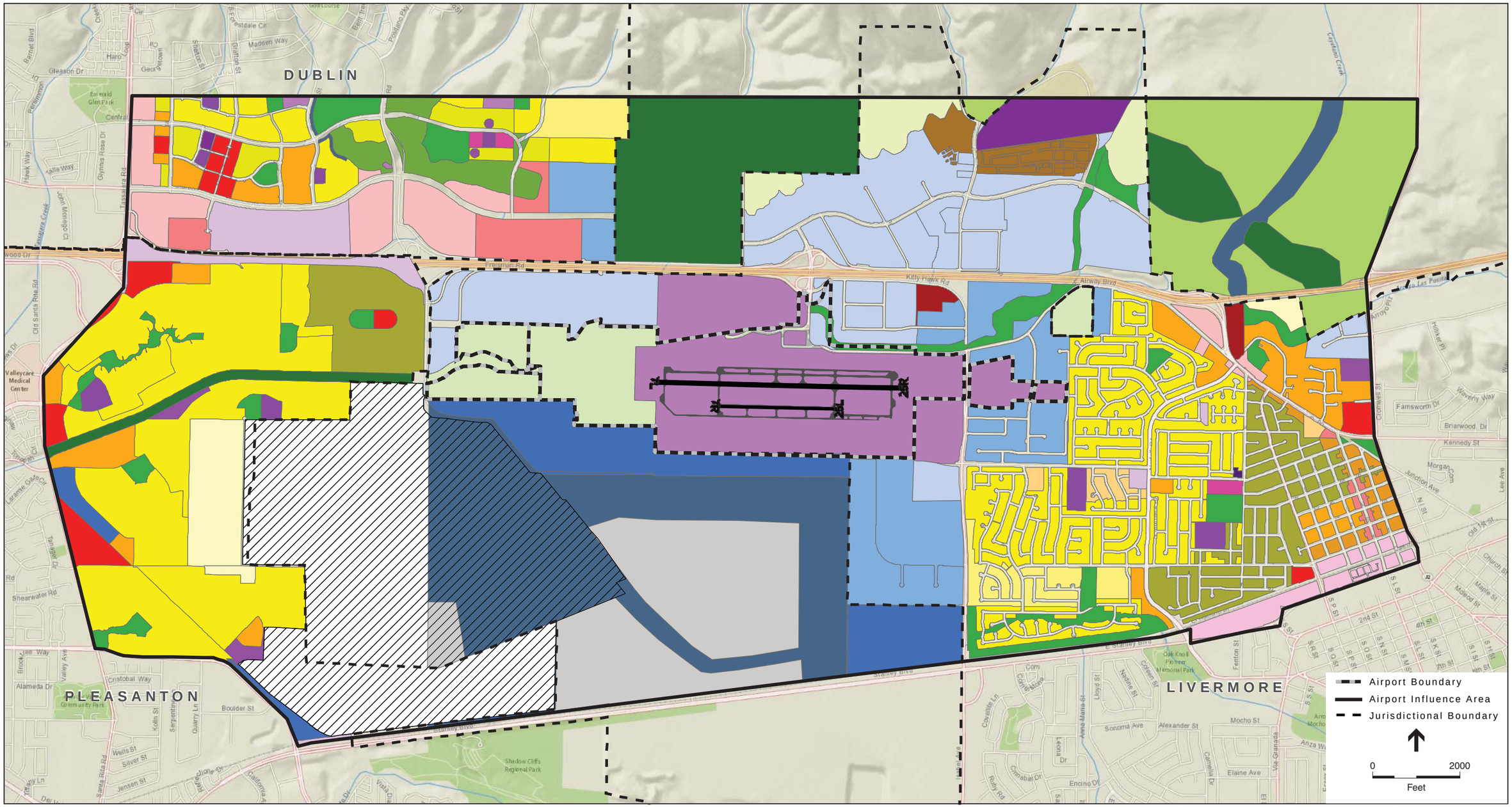

SOURCE: Alameda County, 2012; City of Livermore, 2012; City of Pleasanton, 2012; City of Dublin, 2012; National Geographic, 2012; and ESA Airports, 2012

Figure 4-1
General Plan Land Use Designations in the Vicinity of Livermore Municipal Airport

intended to guide the development of land on and near the airport. Within the AIR Zoning District, two subdistricts were also established: 1) the Airport Operations (AIR-OP) Zoning Subdistrict and 2) the Airport Service (AIR-SE) Zoning Subdistrict.

The AIR-OP Subdistrict provides standards for Airport operations facilities and allows for the development of aviation-related land uses and facilities that are necessary for the continued operation of LVK. Uses permitted under the AIR-OP Subdistrict include runways, taxiways, run-up aprons, airfield lighting, signage, and other similar uses.

The AIR-SE Subdistrict provides standards for Airport support facilities and controls the development of aviation-related land uses and associated facilities to support LVK operations. Permitted uses within the AIR-SE Subdistrict include all facilities already allowed under the AIR-OP Subdistrict, as well as a restaurant, administrative offices, or other facilities that could accommodate a fixed base operator (FBO).

The zoning districts established under the *General Plan Amendment* are intended to guide future development at LVK to be consistent with the updated forecasts of aviation activity. (See Section 4.6 for a discussion of forecasted operations and fleet mix.)

Other than the revisions identified above, no significant changes to land use patterns are proposed as part of the *General Plan*. The *General Plan* encourages development of land in the vicinity of the Airport for light industrial and transportation uses. Zoning in the vicinity of LVK includes open space, commercial, industrial, public, and agricultural.

The *City of Livermore General Plan's Land Use Element* states the following airport land use compatibility related policies for protecting the Municipal Airport from encroachment by incompatible uses:

<u>Objective LU-4.4</u>: Protect the Municipal Airport from encroachment of incompatible uses.

P1. The City shall encourage development of property within the immediate vicinity of the Airport for light industrial and transportation uses to the extent that noise standards and flight clearance requirements are maintained, and environmental impacts are adequately mitigated.

P2. New residential land use designations or the intensification of existing residential land use designations shall be prohibited within the Airport Protection Area (APA). The APA includes the area located within 7,100-feet west of the western end of Runway 7L-25R, 5,000-feet north of the northern edge of runway 7L-25R, 5,000-feet east of the eastern end of Runway 7L-25R and 5,000-feet south of the southern edge of Runway 7L-25R.

P3. Development at the Airport shall be subject to Federal Aviation Administration, Airport Land Use Commission and City building/structure height restrictions.

City of Livermore

- DSP - Downtown Specfic Plan
- E - Public/Quasi-Public
- E-HP-H - Public/Quasi-Public
- NM-2 - Neighborhood Mixed
- CB - Commercial
- CHS - Commercial
- CO - Commercial
- CP - Commercial
- CS - Commercial
- I-1 - Industrial
- I-2 - Industrial
- PD - Planned Development
- PD-16 - Planned Development
- PD-17 - Planned Development
- PDC-00-176 - Planned Development
- PDC-00-195 - Planned Development
- PDI-00-178 - Planned Development
- PDI-00-181 - Planned Development
- PDI-00-182 - Planned Development
- PDI-00-188 - Planned Development
- PDI-01-002 - Planned Development
- PDI-01-003 - Planned Development
- PDI-01-020 - Planned Development
- PDI-03-003 - Planned Development
- PDR-00-168 - Planned Development
- PDR-01-001 - Planned Development
- PDR-01-016 - Planned Development
- RS-3 - Single Family Res
- RS-3-HP-H - Single Family Res
- RS-4 - Single Family Res
- RL-5 - Single Family Res
- RL-5-0 - Single Family Res
- RL-6 - Single Family Res
- RM - Mutiple Family Res
- R-2 - Mutiple Family Res
- RG-12 - Mutiple Family Res
- RG-16 - Mutiple Family Res
- OS-A - Open Space Agriculture
- OS-F - Open Space Flood
- Unclassified

City of Pleasanton

- P - Public and Institutional
- C-N - Commercial Neighborhood
- C-F - Commercial Freeway
- O - Office Commercial
- C-C - Commercial Central
- I-G-40 - General Industrial
- I-P - Industrial Park
- PUD-P - Park
- PUD-C - Commercial-PUD
- PUD-C-O - Commercial and Offices-PUD
- PUD-O/C-C - Commercial Office / Commercial Central-PUD
- PUD-I - Industrial-PUD
- PUD-R-1-65 - Single Family Residential-PUD
- PUD-LDR/HDR/PI & Mixed PI/MDR - Low Density Residential/High Density Residential/Public & Inst-Mixed Public & Inst/Medium Density Residential-PUD
- PUD-LDR - Low Density Residential
- PUD-LDR/MDR - Low Density Residential/Medium Density Residential-PUD
- PUD-MDR - Medium Density Residential
- PUD-HDR - High Density Residential
- PUD-HDR/C - High Density Residential/Commercial
- PUD-RM-25 - Multiple Family Residential-PUD
- R-1-65 - Single Family Residential
- RM-15 - Multiple Family Residential
- RM-25 - Multiple Family Residential
- A - Agriculture
- S - Study District
- COP - Unknown

City of Dublin

- Planned Development

Alameda County

- A - Agriculture
- PD - Planned Development
- U - Unclassified

SOURCE: Alameda County, 2012; City of Livermore, 2012;
City of Pleasanton, 2012; City of Dublin, 2012;
National Geographic, 2012; and ESA Airports, 2012

Figure 4-2 Legend

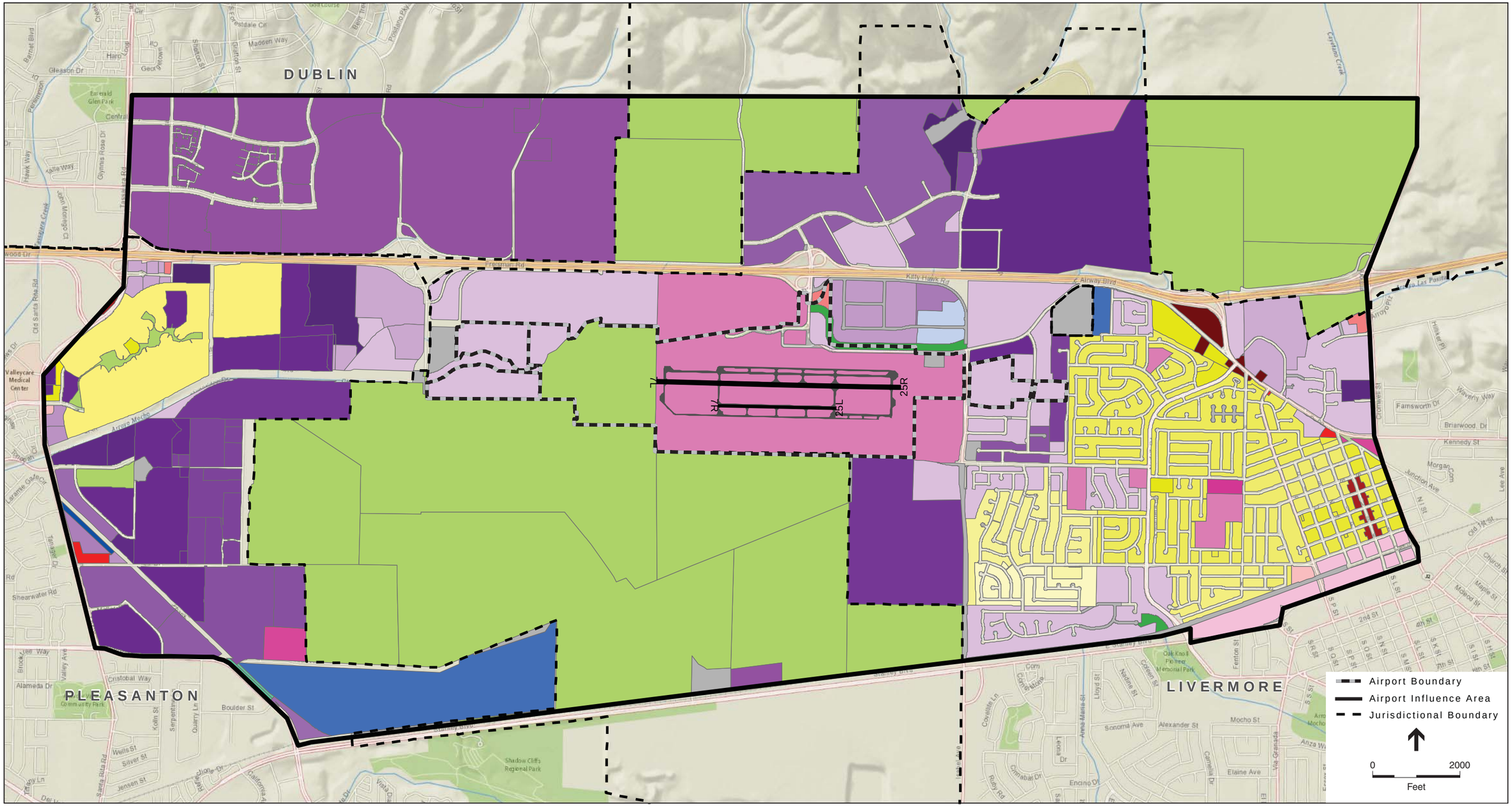

SOURCE: Alameda County, 2012; City of Livermore, 2012; City of Pleasanton, 2012; City of Dublin, 2012; National Geographic, 2012; and ESA Airports, 2012

Figure 4-2
Zoning in the Vicinity of Livermore Municipal Airport

4.3.1.1 City of Livermore Noise Element Policies

The City of Livermore, in participation with surrounding cities, established an Airport Protection Area (APA) to keep surrounding land uses compatible with aviation activities, by discouraging the development of noise-sensitive land uses (e.g., residential uses) in areas frequently overflown by aircraft. In addition to the establishment of the APA, the City of Livermore's *Noise Element* includes objectives and policies that are relevant to aircraft and airport noise. These include the following relevant policies:

Objective N-1.1: Establish appropriate noise levels, design standards and noise reduction techniques for all areas to minimize the adverse effects of noise.

P1. The City shall emphasize noise considerations when making land use planning decisions.

P3. The City shall maintain a pattern of land uses that separates noise-sensitive land uses from major noise sources to the extent possible.

4.3.1.2 City of Livermore El Charro Specific Plan (Adopted July 9, 2007)

The *El Charro Specific Plan* area is located on the western edge of the City of Livermore, and is bound by I-580 to the north, El Charro Road, to the west, open space to the south, and the municipal golf course and LVK to the east. Planned land uses within the *El Charro Specific Plan* area include open space uses (e.g., picnic areas and stomwater facilities) in the southern and southeastern planning area, and a mix of commercial uses (e.g., food and entertainment, mid-box retail, and general merchandise sales) in the north and northwest planning areas.

The following policies are set forth in the *El Charro Specific Plan* in order to promote compatibility with LVK operations:

Land Use and Community Character

Goal 2.2: City open space areas will be maintained to provide a variety of community supportive functions that are compatible with the Airport Protection Area (APA).

Goal 2.4: Develop a land use program within the El Charro Specific Plan Area that is compatible with surrounding land uses and sensitive to the natural environment.

Policy 2.4.1: Locate land uses within the Plan Area to ensure compatibility with surrounding land uses, including quarry operations and the Livermore Municipal Airport.

Objective 2.4.1a: All land uses proposed on properties in the Airport Protection Area (APA) will need prior City approval.

Objective 2.4.1e: Land uses will be generally consistent with density standards contained in the Safety Zone Policies of the Alameda County Airport Land Use Policy Plan (ALUC, July 1986). Uses are defined as compatible when not

exceeding a density of 25 persons per net acre over an 8-hour period, or a density not exceeding 50 persons per net acre for more than two hours per day.

Objective 2.4.1f: All properties within the Specific Plan area will be required to record avigation and noise easements prior to development, to ensure full disclosure and consistency with the objectives for land use compatibility with the Livermore Municipal Airport and the Alameda County ALUC Plan. The easements shall specifically note that operations and flight numbers at the Livermore Municipal Airport could increase in the future.

4.3.2 Pleasanton General Plan 2005 –2025 (Adopted July 2009)

The *Pleasanton General Plan 2005 – 2025* suggests that residential development should be strongly discouraged where the exterior L_{dn} exceeds 55 dB due to aircraft[2]. Should residential land uses be allowed in areas where the L_{dn} exceeds 55 dB, than interior noise levels should be controlled so that maximum noise levels do not exceed 50 dBA in bedrooms or 55 dBA in other rooms. The General Plan also recommends that residential construction should not be allowed in areas where the L_{dn} exceeds 65 dB from aircraft.

The *Pleasanton General Plan 2005 – 2025* states the following airport land use and noise policies for promoting compatibility with operations at LVK:

Air Navigation Hazards (From Public Safety Element)

Goal 6: Minimize the risks to lives and property due to air navigation hazards generated by Livermore Municipal Airport.

Policy 20: Deny any development plan which would create any air navigation hazards due to electrical interference, smoke, glare, lighting, or other navigational hazards in the General Referral Area.

20.1 Refer all General Plan amendments, specific plan amendments and re-zonings proposed within the General Referral Area to the Alameda County Airport Land Use Commission (ALUC).

20.2 Refer all General Plan amendments, specific plan amendments, and re-zonings which lie within the Livermore Municipal Airport Height Referral Area and which may create building exceeding airport height standards to the Alameda County ALUC.

20.3 Prohibit residential land uses within the Livermore Municipal Airport Protection Area.

[2] The L_{dn} (Day/Night Noise Level) is a 24-hour, time weighted annual average noise level, measured in decibels, with an added penalty for people's increased sensitivity to noise at night form 10 PM to 7 AM. The L_{dn} noise metric is very similar to the CNEL metric, except that the period from 7 PM to 10 PM receives no penalty.

Policy 21: Work with the City of Livermore to address air navigation hazards.

21.1 Meet with the City of Livermore and the Federal Aviation Administration (FAA), as necessary, to jointly provide solutions to air navigation conflicts.

Noise (From Noise Element)

Policy 8: Encourage other agencies to reduce noise levels generated by roadways, railways, airports, rapid transit, and other facilities.

8.1 Coordinate with the County Airport Land Use Commission, State Department of Health Services, BART, Union Pacific Railroad Company, Altamont Commuter Express (ACE), Livermore, Dublin, Alameda County, and other agencies, as necessary, to reduce noise generated from sources outside the City's jurisdiction.

8.2 Work with the City of Livermore to address noise impacts of the Livermore Municipal Airport, including the joint monitoring of aircraft noise on a periodic basis.

4.3.2.1 Stoneridge Drive Specific Plan (Adopted October 1989)

The *Stoneridge Drive Specific Plan* area lies outside LVK's safety zones to the west of runways 7L and 7R, but a sizeable portion is still within the AIA. The Stoneridge Drive planning area is bound by I-580 to the north, El Charro Road to the east, Trenery Drive and gravel quarries to the south, and the Pleasanton Meadows subdivision to the west. At the time of adoption in 1989, The *Stoneridge Drive Specific Plan* encompassed 293 acres in and adjacent to the northeastern portion of the City of Pleasanton, and allowed for a mix of residential, retail, commercial, and light industrial development. Since 1989, all but approximately 122.5 acres of *Stoneridge Drive Specific Plan* area has been annexed to Pleasanton and developed, including all areas south of the Arroyo Mocho channel. The only remaining undeveloped portion of the original 293 acre Specific Plan area is the 124 acre Staples Ranch site.

The *Stoneridge Drive Specific Plan* states the following airport-related policies for promoting compatibility with operations at LVK:

Environmental Impact Mitigation

a. Continue to cooperatively seek methods with the City of Livermore to reduce incompatibilities between Livermore Airport operations and Specific Plan land uses through airport operational changes as well as land use mitigation.
b. Prior to construction of new homes…a noise monitoring study is required of airport noise to plot the 55 L_{dn} aircraft noise contour in the Specific Plan area.
c. Future residential uses within the 55 L_{dn} aircraft noise contour will be required to be designed to meet single event interior noise levels of 50 dBA in bedrooms and 55 dBA in other rooms.

d. All new and re-sold homes within the 55 L_{dn} aircraft noise contour shall be subject to a real estate disclosure notice indicating the location of the airport, aircraft operational levels, and projected noise levels.

4.3.2.2 Stoneridge Drive Specific Plan Amendment/Staples Ranch (2010)

In 2010, the City of Pleasanton amended the *Stoneridge Drive Specific Plan* in order to address future development patterns on the 124 acre Staples Ranch property. The *Plan* amendment was drafted as a "stand alone" document that builds upon the original 1989 *Specific Plan* where appropriate, while modifying plans and policies to specifically guide the development of the Staples Ranch property.

The *Stoneridge Drive Specific Plan Amendment/Staples Ranch* identifies approximately 46 acres for a continuing care community, approximately 37 acres for an auto mall, approximately 22 acres for community and neighborhood parks, and approximately 11 acres for a retail/commercial center. The proposed continuing care facility is located outside of LVK's APA.

The *Stoneridge Drive Specific Plan Amendment/Staples Ranch* states the following airport-related policies for promoting compatibility with operations at LVK:

Land Use Policies for Staples Ranch

LU.10 Limit the potential for complaints regarding aircraft overflights by requiring that each Staples Ranch developer record a deed rider disclosing the proximity of the Livermore Airport and requiring the Continuing Care Community to provide airport disclosure notices to residents as well as a centralized telephone number to register complaints about aircraft noise. Require that all residential structures within the Continuing Care Community be designed to meet single event interior noise levels of 50 dBA in bedrooms and 55 dBA in other habitable rooms.

4.3.3 City of Dublin General Plan (Updated to January 19, 2010)

According to the *City of Dublin General Plan* Land Use Element, low and medium-density residential uses are allowed within the APA if, at the time of prezoning, the residential designations are not inconsistent with the policies within the APA. If, at the time of prezoning, the residential designations are inconsistent with the APA, the residential designations will convert to "Future Study Area" with an underlying "Rural Residential/Agriculture" designation.

At the time of this document's publication, no residential land uses within the City's Eastern Dublin Extended Planning Area were within LVK's APA. If, in the future, the City contemplated allowing residential uses within the APA, this would be considered inconsistent with the criteria set forth in Chapter 3 of this Plan, and the residential designations would be required to convert to "Future Study Area" per the *City of Dublin General Plan*.

4.3.4 East County Area Plan (Adopted May 2002)

The *East County Area Plan*, a regional planning document that includes portions of the AIA, identifies LVK as a regional resource and presents policies designed to protect the interests of both the airport and those that live and work in its vicinity.

Goal: To provide for the operation and expansion of the Livermore Municipal Airport and to ensure the compatibility of adjacent uses.

> Policy 147: The County shall recognize the Livermore Municipal Airport as a regional resource and provide for its limited expansion.
>
> Policy 148: The County shall work with cities to ensure that all new uses approved within the Livermore Airport Land Use Commission (ALUC) referral area are consistent with the ALUC Policy Plan.
>
> Policy 149: The County shall protect noise-sensitive land uses adjacent to the Livermore Airport through zoning, height restrictions, noise insulation, avigation easements, and other techniques.

4.4 Existing Airport Land Uses

Existing facilities at LVK are shown in Figures 4-3a and 4-3b, the airport layout plan. The Airport is located on a 643-acre site, approximately 3 miles northwest of downtown Livermore.

4.4.1 Airside Land Uses / Facilities

Airside facilities include two runways, four taxiways, and airport lighting (identification, runway and taxi, and approach lighting). Livermore Municipal Airport also includes airfield lighting, identification lighting, runway and taxiway lighting, visual approach lighting, pavement markings, a helipad, and navigational aids.

Other facilities at LVK include a tiedown apron of 249 spaces (one shelter with 9 aircraft spaces), 22 city-owned enclosed hangars containing 393 aircraft hangar units, an aircraft storage shelter, a corporate-style hangar building with hangar and office space, an airport control tower and a terminal building. The airport's terminal building consists of airport administration offices, a conference room and pilot's lounge. A full range of aviation services are available at LVK, including aircraft rental, flight training, aircraft fueling, and aviation supplies.

4.4.2 Landside Land Uses

Existing landside uses at LVK include an air traffic control tower and general aviation facilities such as hangars with multiple units and seven fixed base operators (FBOs). Other uses include Las Positas Municipal Golf Course, Kitty Hawk Road and light industrial office uses border the Airport to the north and east. West Jack London Boulevard and vacant/agricultural uses border

LVK to the south. The Livermore Water Reclamation Plant is adjacent to the Airport's southeast corner. I-580 and Arroyo Las Positas run parallel to the Livermore Airport on the north side.

4.4.3 Runways

The existing runway configuration at LVK includes two parallel runways aligned in an east/west configuration. Runway 7L-25R serves as the primary runway and is 5,255 feet long by 100 feet wide. Runway 7R-25L is 2,699 feet long by 75 wide and primarily serves local training and small propeller-driven aircraft operations. Both runways are constructed of asphalt.

The Las Positas Golf Course is located 0.2 mile northwest of Runway 7L-25R. Residential uses are two miles northwest of Runway 7L-25R in the City of Dublin. High-density residential land uses in the City of Livermore can be found within 0.75 mile east of the runway and two miles west in the City of Pleasanton. To the north and south, the predominant land uses are agriculture and light industrial.

4.4.4 Taxiways

Seven entrance/exit taxiways are available for use along Runway 7L-25R. Seven exit taxiways are available for use along Runway 7R-25L. Taxiway A is the full-length parallel taxiway that serves Runway 7L-25R and provides access to the general aviation facilities on the north and northeast locations of the airport. The apron edge taxiway on the north side of the airfield is Taxiway J. Taxiway L is the full-length parallel taxiway serving Runway 7R-25L on the south side of the airport. A new apron-edge (Taxiway M) has been proposed to serve future development on the south side. Once constructed, Taxiways L and M will work in a similar manner to Taxiways A and J on the north side. These dual parallel taxiways will enable two-way taxiing which will facilitate efficient movement of aircraft. The five entrance/exit taxiways connecting the two parallel taxiways serving the two runways and the general aviation facilities on the north and south sides of the airport are taxiways B, C, E, G and H.

4.4.5 Typical Flight Procedures

The standard flight procedures are as follows:

- **Runway 7L-25R.** The established traffic pattern for Runway 7L-25R is a left pattern to Runway 7L and a right pattern to Runway 25R. The pattern altitude is established at 1,000 feet above the airport elevation of 400 feet MSL.
- **Runway 7R-25L.** The established traffic pattern for Runway 7R-25L is a right pattern to Runway 7L and a left pattern to Runway 25R. The pattern altitude is established at 1,000 feet above the airport elevation of 400 feet MSL.

AIRPORT BUILDING LIST

NO.	DESCRIPTION
1	TERMINAL/ADMINISTRATION BUILDING
2	FAA AIR TRAFFIC CONTROL TOWER
3	SIERRA ACADEMY
4	AHART AVIATION
5	FUEL FARM
6	FBO HANGAR AND/OR OFFICE
7	T-HANGARS
8	CORPORATE HANGARS
9	FUEL ISLAND
10	POWER VAULT
11	HELICOPTER PARKING
12	NONAVIATION COMMERCIAL BUILDINGS
13	GOLF COURSE PRO SHOP & RESTAURANT
14	GOLF COURSE EQUIPMENT YARD
15	OFF-AIRPORT RESTAURANT
16	ATTITUDE AVIATION
17	REMOTE TRANSMITTER/RECEIVER ANTENNA
18	LOCALIZER ANTENNA
19	GLIDE SLOPE ANTENNA
20	RUNWAY APPROACH LIGHTS (MALSR)
21	VASI (V4L)
22	PAPI (P4R)
23	ASOS
24	LIGHTED WIND CONE & SEGMENTED CIRCLE
25	BARN/FARM BUILDING
26	ILS HOLD LINE
27	FIRE STATION
28	COMPASS ROSE
29	ROTATING BEACON
30	RUNWAY END INDICATOR LIGHTS (REILS)

AIRPORT DATA TABLE

	Existing	Future
Airport Elevation (MSL)	399.9'	No change
Airport Reference Point (LAT/LONG)	N 37°41'36.24" W 121°49'13.27"	No change
Mean Maximum Temperature *	89.5°F	No change
Combined Wind Coverage (10.5 Kts)	97.79%	No change
Magnetic Declination (08/20/2007) **	14°28'E Changing 0°5'W/Year	
Airport Reference Code (ARC)	B-II	No change
NPIAS Service Level	Reliever	No change
Taxiway Lighting	MITL	No change
Taxiway Marking	Centerline	No change
Airport and Terminal Navaids	Localizer (25R), Glideslope (25R), Rotating Beacon, GPS	No change

* Source: Western Region Climate Center (WRCC) Period from 1930-2005
** Source: U.S. National Geophysical Data Center (NGDC)

NON-STANDARD CONDITIONS

	Distance	Location	Existing	Future	Required	Disposition
1	Parallel Runway Separation	Runways 7L/R-25R/L	500 ft.	500 ft.	700 ft.	No change - operations not Independent
2	Parallel Taxiway to Runway Distance	Taxiway A to Runway 7L-25R	250 ft.	250 ft.	300 ft.	No change - Infrequent use by Design Group II airplanes (existing equals standard for Group I)
3	Hold Lines	North side of Runway 7L-25R	175 ft.	175 ft.	250 ft.	No change - location dictated by parallel taxiway location
4	Runway OFA Setback	Golf course fence at northwest corner of Runway 7L-25R	350 ft.	350 ft.	400 ft.	No change - fence not a significant factor
5	RPZ and Extended Runway OFA	Hangar east of Runway 25R approach end	350 ft.	450 ft.	-	Removal of building desirable, but not required by FAA standards
6	Approach Surface Penetration	Hangar on edge of Runway 25R Approach Zone	18:1	18:1	50:1	No change unless adverse affect on ILS documented
7	RSA Length	Approach end of Rwy 7L	540'	540'	600'	No change unless localizer is replaced or removed.

LEGEND

	EXISTING	FUTURE	ULTIMATE
AIRPORT PROPERTY BOUNDARY			
FENCE	X	XX	
RUNWAY PROTECTION ZONE	end B.P. / P.Zde	end B.P. / P.Zde	
BUILDINGS			
AIRFIELD PAVEMENT			
ROAD			
DRIVEWAY/GATE	G	G	
CONTOURS			
ROFA/RPZ BOUNDARY	ROFA / RPZ (E)	ROFA / RPZ (F)	
ILS CRITICAL AREA			
LEASED PROPERTY			
FUTURE ISABEL AVE ROW-EASEMENT			
TEMPORARY NON-AERONAUTICAL			
FUTURE PARCEL			

RUNWAY END COORDINATES

	Existing	Future
Runway 7L Lat./Long.	37°41'38.17"N 121°49'45.84"W	NO CHANGE
Runway 25R Lat./Long.	37°41'37.65"N 121°48'40.50"W	NO CHANGE
Runway 7R Lat./Long.	37°41'33.11"N 121°49'30.31"W	NO CHANGE
Runway 25L Lat./Long.	37°41'32.84"N 121°48'56.74"W	NO CHANGE

RUNWAY DATA TABLE

	Runway7L/25R(Ext/*Fut*)	Runway 7R/25L (Ext/*Fut*)
Approach Visibility Minimums	Visual (7L) > 3/4 mile (Fut) / 1/2 mile (25R)	Visual
FAR Part 77 Approach Slope (CAT A & B)	20:1 34:1(Fut) (7L) / 50:1 (25R)	20:1 (BOTH)
Runway Width & Length	5253' x 100'	2,699' x 75' (Ext)
Pavement Type	Asphalt	Asphalt
Pavement Design Strength (lbs.) - Ext / Fut		
Single Wheel Gear (SWG)	45,000	12,500
Dual Wheel Gear (DWG)	60,000	N/A
Dual Tandem Gear (DTG)	N/A	N/A
Runway Lighting	MIRL	NONE (Ext) / MIRL (Fut)
Runway Marking	Precision	Basic-Visual
Percent Gradient	0.51%	0.58%
Max. Grade Within Runway Length	0.65%	0.71%
Line of Sight Requirements Met	Yes	Yes
Percent Wind Coverage		
Visual Approach Aids	7L-PAPI(4 Box), REIL 25R - MALSR, REIL, VASI	7R - NONE 25L- PAPI (Fut)
Instrument Approach Aids	7L- GPS (Fut) / 25R- GS/LOC/GPS	None
Runway Airport Reference Code	B-II	B-I (Ext)
Critical Aircraft	Falcon 900B	Beech C99 (Ext)
Wingspan (Ft)	63'5"	45'10" (Ext)
Approach Speed (Kts)	115	98 (Ext)
Max. T.O. Weight (Lbs)	45,500 lbs.	12,500 lbs.
Critical Aircraft >60K lbs Length of Haul	N/A	N/A
Runway Safety Area (RSA) Width	300' (Ext & Fut)	120' (Ext & Fut)
RSA Length Beyond Runway Ends	600' (Ext & Fut)	240' (Ext & Fut)
Runway Object Free Area (ROFA) Width	800' (Ext & Fut)	400' (Ext & Fut)
ROFA Length Beyond Runway Ends	600' (Ext & Fut)	240' (Ext & Fut)
Runway Obstacle Free Zone (OFZ) Width	400' (Ext & Fut)	400' (Ext & Fut)
OFZ Length Beyond Runway End	200' (Ext & Fut)	200' (Ext & Fut)
Runway Elevations		
Existing Runway End	7L - 372.9' / 25R - 399.9'	7R - 378.8' / 25L - 394.6'
Future Runway End	NO CHANGE	NO CHANGE
Existing Touchdown Zone	7L - 386.0' / 25R - 399.9'	
Future Touchdown Zone	NO CHANGE	

NOTES:
1. RUNWAY ELEVATIONS PER NOAA OBSTRUCTION SURVEY CONDUCTED APRIL, 2003. (NAVD 88)
2. BUILDING ELEVATIONS PER AERIAL PLANIMETRIC SURVEY, SPRING OF 2007. BUILDING AND FLOOD CONTROL LEVEE ELEVATIONS ADJUSTED FROM NGVD 27 TO NAVD 88 USING AN INCREASE OF 2.64'.
3. TOPOGRAPHIC CONTOURS SHOWN IN NGVD 27 DATUM.
4. ALL HYDROMODIFICATION BASINS (HMBs) TO DRAIN IN 48 HOURS OR LESS.

14°28'E
N
DATE: 8/20/07
ANNUAL RATE OF CHANGE: 0°5'W
SOURCE: NGDC

GRAPHIC SCALE
300 0 300 600
(IN FEET)

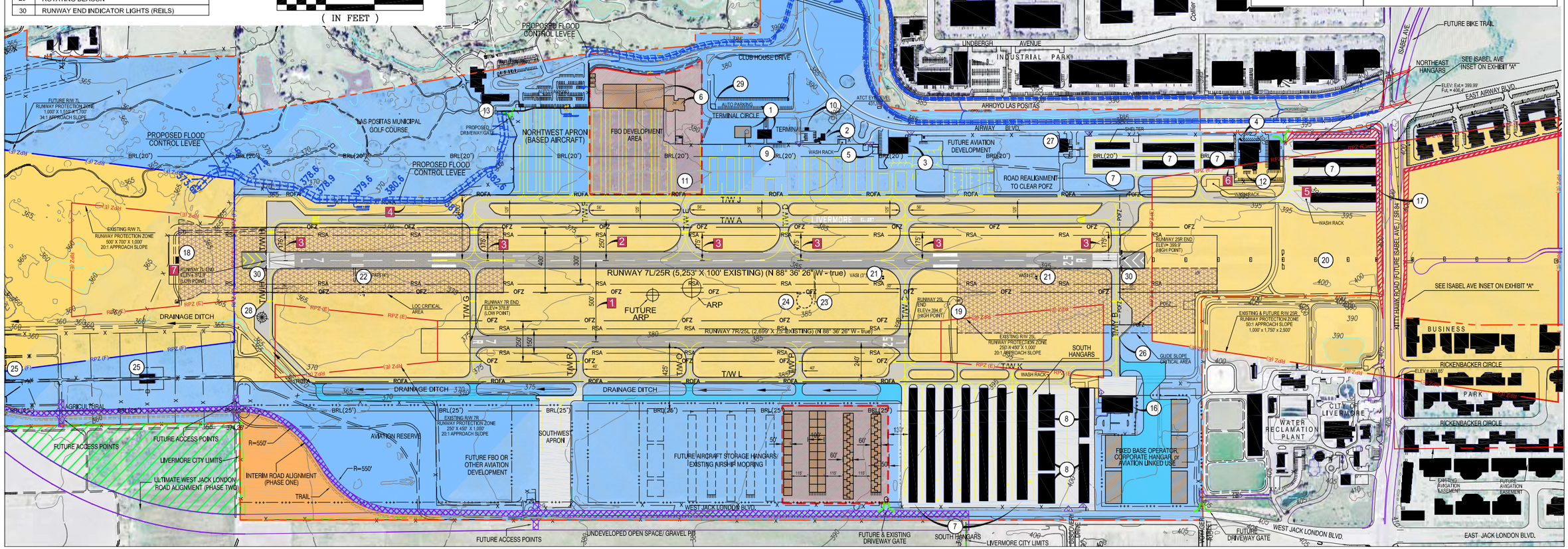

SOURCE: City of Livermore, 2011; and ESA, 2011

Figure 4-3A
Airport Layout Plan

AIRPORT BUILDING LIST

NO.	DESCRIPTION
4	AHART AVIATION
7	T-HANGARS
12	NONAVIATION COMMERCIAL BUILDINGS
16	ATTITUDE AVIATION
17	REMOTE TRANSMITTER/RECEIVER ANTENNA
18	LOCALIZER ANTENNA
20	RUNWAY APPROACH LIGHTS (MALSR)
25	BARN/FARM BUILDING
26	ILS HOLD LINE
28	COMPASS ROSE
30	RUNWAY END INDICATOR LIGHTS (REILS)

NON-STANDARD CONDITIONS

	Distance	Location	Existing	Future	Required	Disposition
1	Parallel Runway Separation	Runways 7L/R-25R/L	500 ft.	500 ft.	700 ft.	No change - operations not independent
2	Parallel Taxiway to Runway Distance	Taxiway A to Runway 7L-25R	250 ft.	250 ft.	300 ft.	No change - Infrequent use by Design Group III airplanes (existing equals standard for Group I)
3	Hold Lines	North side of Runway 7L-25R	175 ft.	175 ft.	250 ft.	No change - location dictated by parallel taxiway location
4	Runway OFA Setback	Golf course fence at northwest corner of Runway 7L-25R	350 ft.	350 ft.	400 ft.	No change - fence not a significant factor
5	RPZ and Extended Runway OFA	Hangar east of Runway 25R approach end	350 ft.	450 ft.	-	Removal of building desirable, but not required by FAA standards
6	Approach Surface Penetration	Hangar on edge of Runway 25R Approach Zone	18:1	18:1	50:1	No change unless adverse affect on ILS documented
7	RSA Length	Approach end of Rwy 7L	540'	540'	600'	No change unless localizer is replaced or removed.

LEGEND

	EXISTING	FUTURE	ULTIMATE
AIRPORT PROPERTY BOUNDARY			
FENCE	— X —	— XX —	
RUNWAY PROTECTION ZONE			
BUILDINGS			
AIRFIELD PAVEMENT			
ROAD			
DRIVEWAY/GATE	G	G	

LEGEND

	EXISTING	FUTURE	ULTIMATE
CONTOURS			
ROFA/RPZ BOUNDARY			
ILS CRITICAL AREA			
LEASED PROPERTY			
FUTURE ISABEL AVE ROW-EASEMENT			
TEMPORARY - NON AERONAUTICAL			
FUTURE PARCEL			

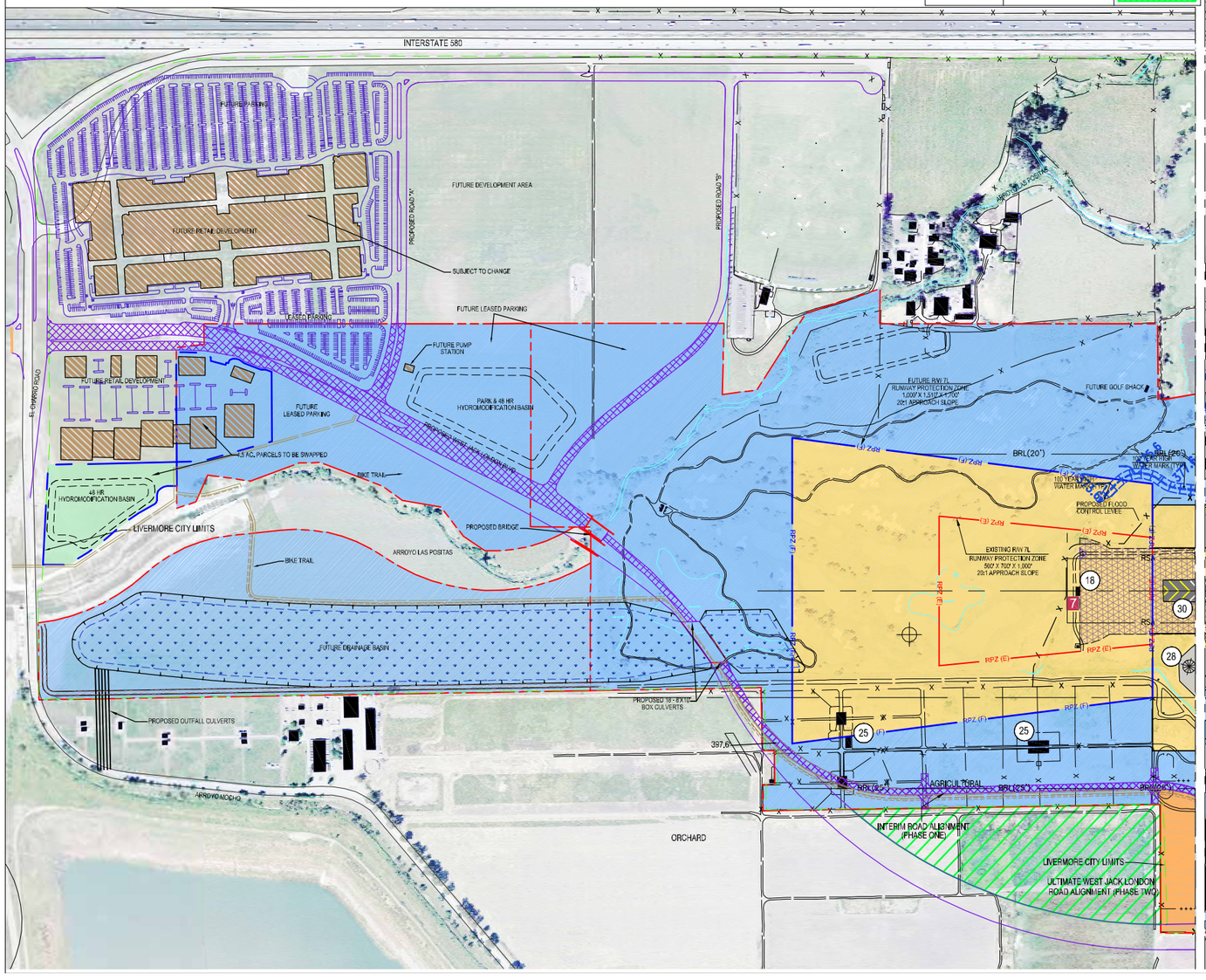

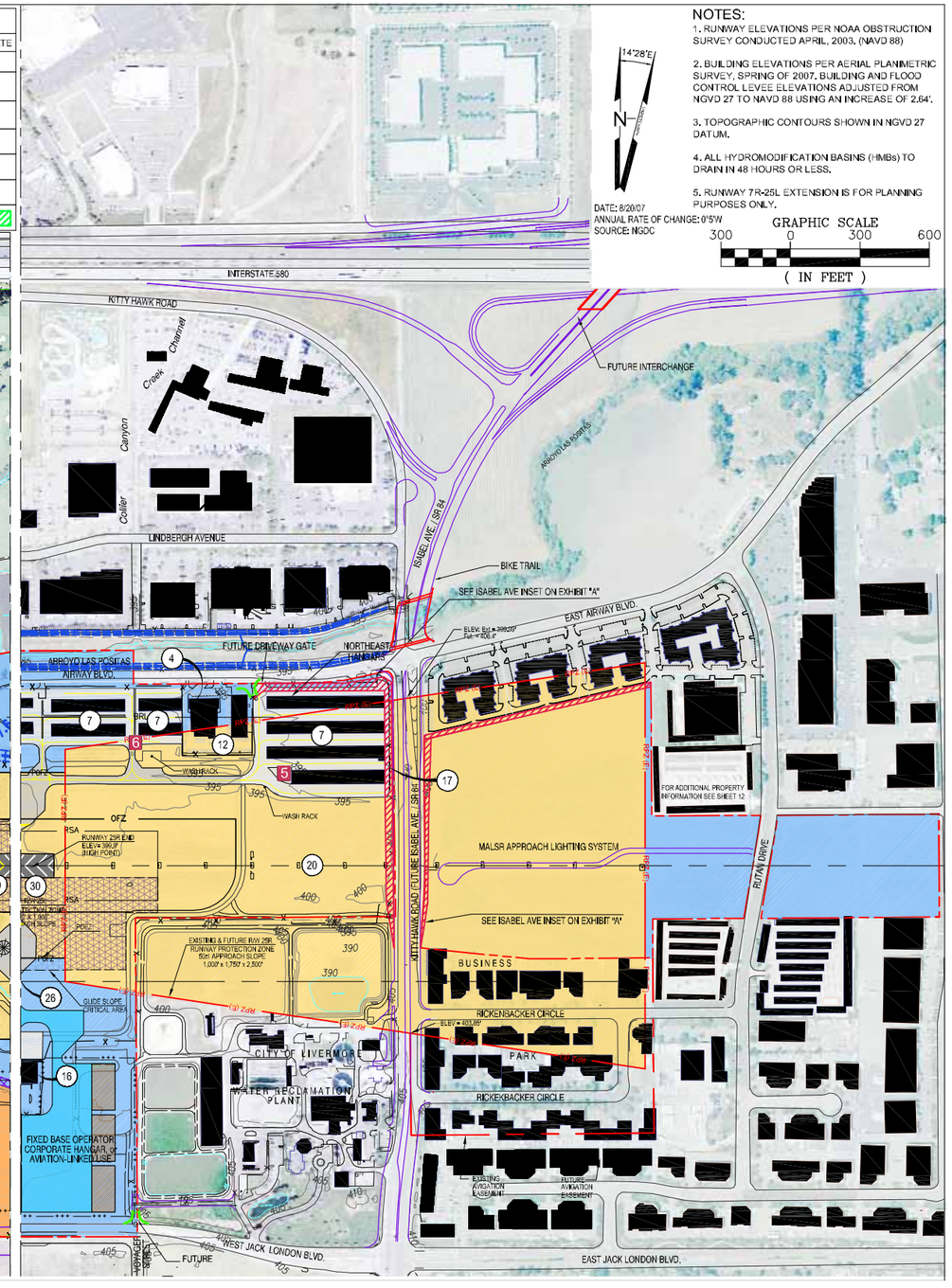

14°28'E

N

DATE: 8/20/07
ANNUAL RATE OF CHANGE: 0°5'W
SOURCE: NGDC

GRAPHIC SCALE
300 0 300 600
(IN FEET)

NOTES:

1. RUNWAY ELEVATIONS PER NOAA OBSTRUCTION SURVEY CONDUCTED APRIL, 2003. (NAVD 88)
2. BUILDING ELEVATIONS PER AERIAL PLANIMETRIC SURVEY, SPRING OF 2007. BUILDING AND FLOOD CONTROL LEVEE ELEVATIONS ADJUSTED FROM NGVD 27 TO NAVD 88 USING AN INCREASE OF 2.64'.
3. TOPOGRAPHIC CONTOURS SHOWN IN NGVD 27 DATUM.
4. ALL HYDROMODIFICATION BASINS (HMBs) TO DRAIN IN 48 HOURS OR LESS.
5. RUNWAY 7R-25L EXTENSION IS FOR PLANNING PURPOSES ONLY.

SOURCE: City of Livermore, 2011; and ESA, 2011

Livermore Municipal Airport Land Use Plan Update . 202229

Figure 4-3B
Airport Layout Plan

4.4.6 Noise Abatement Procedures

The City of Livermore instituted a *Voluntary Restraint from Night Flying* policy on January 14, 2002. This policy requests that aircraft operators, especially those operating jet aircraft, refrain from flying between the hours of 2200 hours and 0600 hours local time.

In addition to the flight procedures listed above, LVK also recommends that pilots avoid flying over residential neighborhoods, remain at traffic pattern altitude as long as practical before descending to land, climb as quickly as practical to pattern altitude on departures, and avoid abrupt maneuvering, power, and propeller changes.

4.5 Airport Planning Documents

4.5.1 Airport Protection Area

The City of Livermore approached the ALUC in June 1991 (Resolution 192-91) to request an amendment to the Alameda County ALUPP that would incorporate new policies and standards by establishing an Airport Protection Area (APA) around the airport. New or more intensive residential land use designations would be prohibited within the APA. Through the establishment of the APA, the City hoped to reduce potential exposure to and adverse effects associated with aircraft operations by preventing new residential land uses within the immediate airport vicinity. (Typical complaints from residents near airports are associated with noise exposure.)

On January 13, 1993, the ALUC adopted a resolution to restrict or prevent the encroachment of incompatible land uses (i.e., noise-sensitive residential uses) near the airport or under the flight pattern for the airport, and Chapters II and III of the 1987 *Land Use Policy Plan* were amended to provide for the APA.

4.5.2 Livermore Municipal Airport General Plan Amendment and Rezoning

As previously discussed in Section 4.3.1, due to its age, the need to update operation forecasts, and how planned land uses in jurisdictions around LVK have changed, the 1975 *Livermore Municipal Airport Master Plan* was rescinded by the City of Livermore in March 2010. In its place, the City adopted changes to the *General Plan* and City zoning ordinance to include an Airport Zoning District (AIR). The purpose of the change is to make current land use regulation more consistent with the underlying General Plan designation of Community Facilities – Airport (CF-AIR) so as to foster development that would allow for the safe and efficient operation of the Airport. As a part of this zoning change, two subdistricts, AIR-OP and AIR-SE, were created. Each subdistrict, as described in Section 4.3.1, is intended to guide development in these areas to allow for aviation and aviation-related land uses that will facilitate and support the safe operation of LVK. As part of this effort, forecasted fleet mix and operational numbers were updated to replace those from the rescinded 1975 *Master Plan*. The *General Plan* and zoning update were approved in March of 2010. Forecasted fleet mix and operational numbers are discussed below.

4.6 Existing and Future Airport Activity

As a part of the Livermore Municipal Airport General Plan Amendment and Rezoning effort, Coffman Associates, Inc. prepared unconstrained fleet mix and operations forecasts for LVK. These forecasts were approved by FAA in the fall of 2008.

4.6.1 Fleet Mix

As of 2008, 600 aircraft were based at LVK. While trends show a larger percentage of jet aircraft being based at LVK over the course of the 20-year planning period, the greatest number of aircraft at LVK will remain Single-Engine Piston. Table 4-1 presents the existing and forecast fleet mix for based aircraft at LVK.

TABLE 4-1
EXISTING AND FORECAST BASED FLEET MIX

Aircraft Type	2008	2030
Single Engine Piston	552	620
Multi-Engine Piston	39	73
Jet	6	20
Helicopter	3	7

Source: Coffman Associates, Inc. 2008.

4.6.2 Operations

Projections of aircraft operations at LVK are based on the number of operations per based aircraft and historical data. Table 4-2 presents the current and projected total number of aircraft operations by type of operation.

TABLE 4-2
EXISTING AND PROJECTED ANNUAL AIRCRAFT OPERATIONS

Type of Operation	2008	2030
Itinerant		
General Aviation	74,480	86,400
Air Taxi	1,500	3,800
Military	230	230
Total Itinerant	*76,210*	*90,430*
Local		
General Aviation	104,977	129,600
Military	70	70
Total Local	*105,047*	*129,670*
Total Operations	**181,257**	**220,100**

Source: Coffman Associates, Inc. 2008.

CHAPTER 5
References

California Building Standards Commission, *2001 California Building Code*, California Code of Regulations, Title 24, effective November 2002.

California Department of Transportation, Division of Aeronautics, *California Airport Land Use Planning Handbook*, January 2002.

California Department of Transportation, *California Airport Land Use Commission Laws*, Public Utility Code 21670, February 2007.

City of Dublin, *City of Dublin General Plan*, adopted September 2006.

City of Livermore, 2007. Livermore Municipal Airport Layout Plan. Approved in 2004.

City of Livermore, *City of Livermore General Plan*, amended June 2009.

City of Livermore, *City of Livermore El Charro Specific Plan*, adopted July 9, 2007.

City of Pleasanton, *Pleasanton General Plan 2005 – 2025*, adopted July 2009.

City of Pleasanton, *Stoneridge Drive Specific Plan*, adopted October 1989.

City of Pleasanton, *Stoneridge Drive Specific Plan Amendment/Staples Ranch*, adopted February 2009.

County of Alameda, *East County Area Plan*, adopted May 1994, updated May 2002.

FAA, Advisory Circular (AC) 150/5390 – 2B, *Heliport Design*, September 30, 2004.

FAA, Federal Aviation Regulation (FAR) Part 77: *Objects Affecting Navigable Airspace*, 2007.

Horvath, C. October 31, 2006. Personal communication (email) from Alameda County regarding heliport locations transmitted to L. Harmon, ESA. Sacramento, California.

Mead & Hunt, *Borrego Valley Airport Land Use Compatibility Plan*, December 2006.

This page left intentionally blank.

Appendices

ESA

APPENDIX A

State Law Related to Airport Land Use Planning

AERONAUTICS LAW
PUBLIC UTILITIES CODE
Division 9—Aviation
Part 1—State Aeronautics Act
Chapter 4—Airports and Air Navigation Facilities

Article 3.5
Airport Land Use Commission

(As of January 2011)

21670. Creation, Membership, Selection

(a) The Legislature hereby finds and declares that:

(1) It is in the public interest to provide for the orderly development of each public use airport in this state and the area surrounding these airports so as to promote the overall goals and objectives of the California airport noise standards adopted pursuant to Section 21669 and to prevent the creation of new noise and safety problems.

(2) It is the purpose of this article to protect public health, safety, and welfare by ensuring the orderly expansion of airports and the adoption of land use measures that minimize the public's exposure to excessive noise and safety hazards within areas around public airports to the extent that these areas are not already devoted to incompatible uses.

(b) In order to achieve the purposes of this article, every county in which there is located an airport which is served by a scheduled airline shall establish an airport land use commission. Every county, in which there is located an airport which is not served by a scheduled airline, but is operated for the benefit of the general public, shall establish an airport land use commission, except that the board of supervisors of the county may, after consultation with the appropriate airport operators and affected local entities and after a public hearing, adopt a resolution finding that there are no noise, public safety, or land use issues affecting any airport in the county which require the creation of a commission and declaring the county exempt from that requirement. The board shall, in this event, transmit a copy of the resolution to the Director of Transportation. For purposes of this section, "commission" means an airport land use commission. Each commission shall consist of seven members to be selected as follows:

(1) Two representing the cities in the county, appointed by a city selection committee comprised of the mayors of all the cities within that county, except that if there are any cities contiguous or adjacent to the qualifying airport, at least one representative shall be appointed therefrom. If there are no cities within a county, the number of representatives provided for by paragraphs (2) and (3) shall each be increased by one.

(2) Two representing the county, appointed by the board of supervisors.

(3) Two having expertise in aviation, appointed by a selection committee comprised of the managers of all of the public airports within that county.

(4) One representing the general public, appointed by the other six members of the commission.

(c) Public officers, whether elected or appointed, may be appointed and serve as members of the commission during their terms of public office.

(d) Each member shall promptly appoint a single proxy to represent him or her in commission affairs and to vote on all matters when the member is not in attendance. The proxy shall be designated in a signed written instrument which shall be kept on file at the commission offices, and the proxy shall serve at the pleasure of the appointing member. A vacancy in the office of proxy shall be filled promptly by appointment of a new proxy.

(e) A person having an "expertise in aviation" means a person who, by way of education, training, business, experience, vocation, or avocation has acquired and possesses particular knowledge of, and familiarity with, the function, operation, and role of airports, or is an elected official of a local agency which owns or operates an airport.

(f) It is the intent of the Legislature to clarify that, for the purposes of this article, that special districts, school districts, and community college districts are included among the local agencies that are subject to airport land use laws and other requirements of this article.

21670.1. Action by Designated Body Instead of Commission

(a) Notwithstanding any other provision of this article, if the board of supervisors and the city selection committee of mayors in the county each makes a determination by a majority vote that proper land use planning can be accomplished through the actions of an appropriately designated body, then the body so designated shall assume the planning responsibilities of an airport land use commission as provided for in this article, and a commission need not be formed in that county.

(b) A body designated pursuant to subdivision (a) that does not include among its membership at least two members having expertise in aviation, as defined in subdivision (e) of Section 21670, shall, when acting in the capacity of an airport land use commission, be augmented so that body, as augmented, will have at least two members having that expertise. The commission shall be constituted pursuant to this section on and after March 1, 1988.

(c)

(1) Notwithstanding subdivisions (a) and (b), and subdivision (b) of Section 21670, if the board of supervisors of a county and each affected city in that county each makes a determination that proper land use planning pursuant to this article can be

accomplished pursuant to this subdivision, then a commission need not be formed in that county.

(2) If the board of supervisors of a county and each affected city makes a determination that proper land use planning may be accomplished and a commission is not formed pursuant to paragraph (1), that county and the appropriate affected cities having jurisdiction over an airport, subject to the review and approval by the Division of Aeronautics of the department, shall do all of the following:

(A) Adopt processes for the preparation, adoption, and amendment of the airport land use compatibility plan for each airport that is served by a scheduled airline or operated for the benefit of the general public.

(B) Adopt processes for the notification of the general public, landowners, interested groups, and other public agencies regarding the preparation, adoption, and amendment of the airport land use compatibility plans.

(C) Adopt processes for the mediation of disputes arising from the preparation, adoption, and amendment of the airport land use compatibility plans.

(D) Adopt processes for the amendment of general and specific plans to be consistent with the airport land use compatibility plans.

(E) Designate the agency that shall be responsible for the preparation, adoption, and amendment of each airport land use compatibility plan.

(3) The Division of Aeronautics of the department shall review the processes adopted pursuant to paragraph (2), and shall approve the processes if the division determines that the processes are consistent with the procedure required by this article and will do all of the following:

(A) Result in the preparation, adoption, and implementation of plans within a reasonable amount of time.

(B) Rely on the height, use, noise, safety, and density criteria that are compatible with airport operations, as established by this article, and referred to as the Airport Land Use Planning Handbook, published by the division, and any applicable federal aviation regulations, including, but not limited to, Part 77 (commencing with Section 77.1) of Title 14 of the Code of Federal Regulations.

(C) Provide adequate opportunities for notice to, review of, and comment by the general public, landowners, interested groups, and other public agencies.

(4) If the county does not comply with the requirements of paragraph (2) within 120 days, then the airport land use compatibility plan and amendments shall not be considered adopted pursuant to this article and a commission shall be established within 90 days of the determination of noncompliance by the division and an airport land use compatibility plan shall be adopted pursuant to this article within 90 days of the establishment of the commission.

(d) A commission need not be formed in a county that has contracted for the preparation of airport land use compatibility plans with the Division of Aeronautics under the California Aid to Airports Program (Chapter 4 (commencing with Section 4050) of Title 21 of the

California Code of Regulations), Project Ker-VAR 90-1, and that submits all of the following information to the Division of Aeronautics for review and comment that the county and the cities affected by the airports within the county, as defined by the airport land use compatibility plans:

(1) Agree to adopt and implement the airport land use compatibility plans that have been developed under contract.

(2) Incorporated the height, use, noise, safety, and density criteria that are compatible with airport operations as established by this article, and referred to as the Airport Land Use Planning Handbook, published by the division, and any applicable federal aviation regulations, including, but not limited to, Part 77 (commencing with Section 77.1) of Title 14 of the Code of Federal Regulations, as part of the general and specific plans for the county and for each affected city.

(3) If the county does not comply with this subdivision on or before May 1, 1995, then a commission shall be established in accordance with this article.

(e)

(1) A commission need not be formed in a county if all of the following conditions are met:

(A) The county has only one public use airport that is owned by a city.

(i) The county and the affected city adopt the elements in paragraph (2) of subdivision (d), as part of their general and specific plans for the county and the affected city.

(ii) The general and specific plans shall be submitted, upon adoption, to the Division of Aeronautics. If the county and the affected city do not submit the elements specified in paragraph (2) of subdivision (d), on or before May 1, 1996, then a commission shall be established in accordance with this article.

21670.2. Los Angeles County Applicability to Counties Having over 4 Million Population

(a) Sections 21670 and 21670.1 do not apply to the County of Los Angeles. In that county, the county regional planning commission has the responsibility for coordinating the airport planning of public agencies within the county. In instances where impasses result relative to this planning, an appeal may be made to the county regional planning commission by any public agency involved. The action taken by the county regional planning commission on an appeal may be overruled by a four-fifths vote of the governing body of a public agency whose planning led to the appeal.

(b) By January 1, 1992, the county regional planning commission shall adopt the airport land use compatibility plans required pursuant to Section 21675.

(c) Sections 21675.1, 21675.2, and 21679.5 do not apply to the County of Los Angeles until January 1, 1992. If the airport land use compatibility plans required pursuant to Section 21675 are not adopted by the county regional planning commission by January 1, 1992, Sections 21675.1 and 21675.2 shall apply to the County of Los Angeles until the airport land use compatibility plans are adopted.

21670.3. San Diego County

(a) Sections 21670 and 21670.1 do not apply to the County of San Diego. In that county, the San Diego County Regional Airport Authority, as established pursuant to Section 170002, shall be responsible for the preparation, adoption, and amendment of an airport land use compatibility plan for each airport in San Diego County.

(b) The San Diego County Regional Airport Authority shall engage in a public collaborative planning process when preparing and updating an airport land use compatibility plan.

21670.4. Intercounty Airports

(a) As used in this section, "intercounty airport" means any airport bisected by a county line through its runways, runway protection zones, inner safety zones, inner turning zones, outer safety zones, or sideline safety zones, as defined by the department's Airport Land Use Planning Handbook and referenced in the airport land use compatibility plan formulated under Section 21675.

(b) It is the purpose of this section to provide the opportunity to establish a separate airport land use commission so that an intercounty airport may be served by a single airport land use planning agency, rather than having to look separately to the airport land use commissions of the affected counties.

(c) In addition to the airport land use commissions created under Section 21670 or the alternatives established under Section 21670.1, for their respective counties, the boards of supervisors and city selection committees for the affected counties, by independent majority vote of each county's two delegations, for any intercounty airport, may do either of the following:

(1) Establish a single separate airport land use commission for that airport. That commission shall consist of seven members to be selected as follows:

(A) One representing the cities in each of the counties, appointed by that county's city selection committee.

(B) One representing each of the counties, appointed by the board of supervisors of each county.

(C) One from each county having expertise in aviation, appointed by a selection committee comprised of the managers of all the public airports within that county.

(D) One representing the general public, appointed by the other six members of the commission.

(2) In accordance with subdivision (a) or (b) of Section 21670.1, designate an existing appropriate entity as that airport's land use commission.

21671. Airport Owned by a City, District, or County

In any county where there is an airport operated for the general public which is owned by a city or district in another county or by another county, one of the representatives provided by paragraph (1) of subdivision (b) of Section 21670 shall be appointed by the city selection committee of mayors of the cities of the county in which the owner of that airport is located, and one of the representatives provided by paragraph (2) of subdivision (b) of Section 21670 shall be appointed by the board of supervisors of the county in which the owner of that airport is located.

21671.5. Term of Office

(a) Except for the terms of office of the members of the first commission, the term of office of each member shall be four years and until the appointment and qualification of his or her successor. The members of the first commission shall classify themselves by lot so that the term of office of one member is one year, of two members is two years, of two members is three years, and of two members is four years. The body that originally appointed a member whose term has expired shall appoint his or her successor for a full term of four years. Any member may be removed at any time and without cause by the body appointing that member. The expiration date of the term of office of each member shall be the first Monday in May in the year in which that member's term is to expire. Any vacancy in the membership of the commission shall be filled for the unexpired term by appointment by the body which originally appointed the member whose office has become vacant. The chairperson of the commission shall be selected by the members thereof.

(b) Compensation, if any, shall be determined by the board of supervisors.

(c) Staff assistance, including the mailing of notices and the keeping of minutes and necessary quarters, equipment, and supplies shall be provided by the county. The usual and necessary operating expenses of the commission shall be a county charge.

(d) Notwithstanding any other provisions of this article, the commission shall not employ any personnel either as employees or independent contractors without the prior approval of the board of supervisors.

(e) The commission shall meet at the call of the commission chairperson or at the request of the majority of the commission members. A majority of the commission members shall constitute a quorum for the transaction of business. No action shall be taken by the commission except by the recorded vote of a majority of the full membership.

(f) The commission may establish a schedule of fees necessary to comply with this article. Those fees shall be charged to the proponents of actions, regulations, or permits, shall not exceed the estimated reasonable cost of providing the service, and shall be imposed pursuant to Section 66016 of the Government Code. Except as provided in subdivision (g), after June 30, 1991, a commission that has not adopted the airport land use compatibility plan required by Section 21675 shall not charge fees pursuant to this subdivision until the commission adopts the plan.

(g) In any county that has undertaken by contract or otherwise completed airport land use compatibility plans for at least one-half of all public use airports in the county, the commission may continue to charge fees necessary to comply with this article until June 30, 1992, and, if the airport land use compatibility plans are complete by that date, may continue charging fees after June 30, 1992. If the airport land use compatibility plans are not complete by June 30, 1992, the commission shall not charge fees pursuant to subdivision (f) until the commission adopts the land use plans.

21672. Rules and Regulations

Each commission shall adopt rules and regulations with respect to the temporary disqualification of its members from participating in the review or adoption of a proposal because of conflict of interest and with respect to appointment of substitute members in such cases.

21673. Initiation of Proceedings for Creation by Owner of Airport

In any county not having a commission or a body designated to carry out the responsibilities of a commission, any owner of a public airport may initiate proceedings for the creation of a commission by presenting a request to the board of supervisors that a commission be created and showing the need therefore to the satisfaction of the board of supervisors.

21674. Powers and Duties

The commission has the following powers and duties, subject to the limitations upon its jurisdiction set forth in Section 21676:

(a) To assist local agencies in ensuring compatible land uses in the vicinity of all new airports and in the vicinity of existing airports to the extent that the land in the vicinity of those airports is not already devoted to incompatible uses.

(b) To coordinate planning at the state, regional, and local levels so as to provide for the orderly development of air transportation, while at the same time protecting the public health, safety, and welfare.

(c) To prepare and adopt an airport land use compatibility plan pursuant to Section 21675.

(d) To review the plans, regulations, and other actions of local agencies and airport operators pursuant to Section 21676.

(e) The powers of the commission shall in no way be construed to give the commission jurisdiction over the operation of any airport.

(f) In order to carry out its responsibilities, the commission may adopt rules and regulations consistent with this article.

21674.5. Training of Airport Land Use Commission's Staff

(a) The Department of Transportation shall develop and implement a program or programs to assist in the training and development of the staff of airport land use commissions, after consulting with airport land use commissions, cities, counties, and other appropriate public entities.

(b) The training and development program or programs are intended to assist the staff of airport land use commissions in addressing high priority needs, and may include, but need not be limited to, the following:

(1) The establishment of a process for the development and adoption of airport land use compatibility plans.

(2) The development of criteria for determining the airport influence area.

(3) The identification of essential elements that should be included in the airport land use compatibility plans.

(4) Appropriate criteria and procedures for reviewing proposed developments and determining whether proposed developments are compatible with the airport use.

(5) Any other organizational, operational, procedural, or technical responsibilities and functions that the department determines to be appropriate to provide to commission staff and for which it determines there is a need for staff training or development.

(c) The department may provide training and development programs for airport land use commission staff pursuant to this section by any means it deems appropriate. Those programs may be presented in any of the following ways:

(1) By offering formal courses or training programs.

(2) By sponsoring or assisting in the organization and sponsorship of conferences, seminars, or other similar events.

(3) By producing and making available written information.

(4) Any other feasible method of providing information and assisting in the training and development of airport land use commission staff.

21674.7. Airport Land Use Planning Handbook

(a) An airport land use commission that formulates, adopts, or amends an airport land use compatibility plan shall be guided by information prepared and updated pursuant to Section 21674.5 and referred to as the Airport Land Use Planning Handbook published by the Division of Aeronautics of the Department of Transportation.

(b) It is the intent of the Legislature to discourage incompatible land uses near existing airports. Therefore, prior to granting permits for the renovation or remodeling of an existing building, structure, or facility, and before the construction of a new building, it is the intent of the Legislature that local agencies shall be guided by the height, use, noise, safety, and density criteria that are compatible with airport operations, as established by this article, and referred to as the Airport Land Use Planning Handbook, published by the division, and any applicable federal aviation regulations, including, but not limited to, Part 77 (commencing with Section 77.1) of Title 14 of the Code of Federal Regulations, to the extent that the criteria has been incorporated into the plan prepared by a commission pursuant to Section 21675. This subdivision does not limit the jurisdiction of a commission as established by this article. This subdivision does not limit the authority of local agencies to overrule commission actions or recommendations pursuant to Sections 21676, 21676.5, or 21677.

21675. Land Use Plan

(a) Each commission shall formulate an airport land use compatibility plan that will provide for the orderly growth of each public airport and the area surrounding the airport within the jurisdiction of the commission, and will safeguard the general welfare of the inhabitants within the vicinity of the airport and the public in general. The commission's airport land use compatibility plan shall include and shall be based on a long-range master plan or an airport layout plan, as determined by the Division of Aeronautics of the Department of Transportation, that reflects the anticipated growth of the airport during at least the next 20 years. In formulating an airport land use compatibility plan, the commission may develop height restrictions on buildings, specify use of land, and determine building standards, including soundproofing adjacent to airports, within the airport influence area. The airport land use compatibility plan shall be reviewed as often as necessary in order to accomplish its purposes, but shall not be amended more than once in any calendar year.

(b) The commission shall include, within its airport land use compatibility plan formulated pursuant to subdivision (a), the area within the jurisdiction of the commission surrounding any military airport for all of the purposes specified in subdivision (a). The

airport land use compatibility plan shall be consistent with the safety and noise standards in the Air Installation Compatible Use Zone prepared for that military airport. This subdivision does not give the commission any jurisdiction or authority over the territory or operations of any military airport.

(c) The airport influence area shall be established by the commission after hearing and consultation with the involved agencies.

(d) The commission shall submit to the Division of Aeronautics of the department one copy of the airport land use compatibility plan and each amendment to the plan.

(e) If an airport land use compatibility plan does not include the matters required to be included pursuant to this article, the Division of Aeronautics of the department shall notify the commission responsible for the plan.

21675.1. Adoption of Land Use Plan

(a) By June 30, 1991, each commission shall adopt the airport land use compatibility plan required pursuant to Section 21675, except that any county that has undertaken by contract or otherwise completed airport land use compatibility plans for at least one-half of all public use airports in the county, shall adopt that airport land use compatibility plan on or before June 30, 1992.

(b) Until a commission adopts an airport land use compatibility plan, a city or county shall first submit all actions, regulations, and permits within the vicinity of a public airport to the commission for review and approval. Before the commission approves or disapproves any actions, regulations, or permits, the commission shall give public notice in the same manner as the city or county is required to give for those actions, regulations, or permits. As used in this section, "vicinity" means land that will be included or reasonably could be included within the airport land use compatibility plan. If the commission has not designated an airport influence area for the airport land use compatibility plan, then "vicinity" means land within two miles of the boundary of a public airport.

(c) The commission may approve an action, regulation, or permit if it finds, based on substantial evidence in the record, all of the following:

(1) The commission is making substantial progress toward the completion of the airport land use compatibility plan.

(2) There is a reasonable probability that the action, regulation, or permit will be consistent with the airport land use compatibility plan being prepared by the commission.

(3) There is little or no probability of substantial detriment to or interference with the future adopted airport land use compatibility plan if the action, regulation, or permit is ultimately inconsistent with the airport land use compatibility plan.

(d) If the commission disapproves an action, regulation, or permit, the commission shall notify the city or county. The city or county may overrule the commission, by a two-thirds vote of its governing body, if it makes specific findings that the proposed action, regulation, or permit is consistent with the purposes of this article, as stated in Section 21670.

(e) If a city or county overrules the commission pursuant to subdivision (d), that action shall not relieve the city or county from further compliance with this article after the commission adopts the airport land use compatibility plan.

(f) If a city or county overrules the commission pursuant to subdivision (d) with respect to a publicly owned airport that the city or county does not operate, the operator of the airport is not liable for damages to property or personal injury resulting from the city's or county's decision to proceed with the action, regulation, or permit.

(g) A commission may adopt rules and regulations that exempt any ministerial permit for single-family dwellings from the requirements of subdivision (b) if it makes the findings required pursuant to subdivision (c) for the proposed rules and regulations, except that the rules and regulations may not exempt either of the following:

(1) More than two single-family dwellings by the same applicant within a subdivision prior to June 30, 1991.

(2) Single-family dwellings in a subdivision where 25 percent or more of the parcels are undeveloped.

21675.2. Approval or Disapproval of Actions, Regulations, or Permits

(a) If a commission fails to act to approve or disapprove any actions, regulations, or permits within 60 days of receiving the request pursuant to Section 21675.1, the applicant or his or her representative may file an action pursuant to Section 1094.5 of the Code of Civil Procedure to compel the commission to act, and the court shall give the proceedings preference over all other actions or proceedings, except previously filed pending matters of the same character.

(b) The action, regulation, or permit shall be deemed approved only if the public notice required by this subdivision has occurred. If the applicant has provided seven days advance notice to the commission of the intent to provide public notice pursuant to this subdivision, then, not earlier than the date of the expiration of the time limit established by Section 21675.1, an applicant may provide the required public notice. If the applicant chooses to provide public notice, that notice shall include a description of the proposed action, regulation, or permit substantially similar to the descriptions which are commonly used in public notices by the commission, the location of any proposed development, the application number, the name and address of the commission, and a statement that the action, regulation, or permit shall be deemed approved if the commission has not acted within 60 days. If the applicant has provided the public notice specified in this subdivision, the time limit for action by the commission shall be extended to 60 days after the public notice is provided. If the applicant provides notice pursuant to this section, the commission shall refund to the applicant any fees which were collected for providing notice and which were not used for that purpose.

(c) Failure of an applicant to submit complete or adequate information pursuant to Sections 65943 to 65946, inclusive, of the Government Code, may constitute grounds for disapproval of actions, regulations, or permits.

(d) Nothing in this section diminishes the commission's legal responsibility to provide, where applicable, public notice and hearing before acting on an action, regulation, or permit.

21676. Review of Local General Plans

(a) Each local agency whose general plan includes areas covered by an airport land use compatibility plan shall, by July 1, 1983, submit a copy of its plan or specific plans to the airport land use commission. The commission shall determine by August 31, 1983, whether the plan or plans are consistent or inconsistent with the airport land use compatibility plan. If the plan or plans are inconsistent with the airport land use compatibility plan, the local agency shall be notified and that local agency shall have another hearing to reconsider its airport land use compatibility plans. The local agency may propose to overrule the commission after the hearing by a two-thirds vote of its governing body if it makes specific findings that the proposed action is consistent with the purposes of this article stated in Section 21670. At least 45 days prior to the decision to overrule the commission, the local agency governing body shall provide the commission and the division a copy of the proposed decision and findings. The commission and the division may provide comments to the local agency governing body within 30 days of receiving the proposed decision and findings. If the commission or the division's comments are not available within this time limit, the local agency governing body may act without them. The comments by the division or the commission are advisory to the local agency governing body. The local agency governing body shall include comments from the commission and the division in the final record of any final decision to overrule the commission, which may only be adopted by a two-thirds vote of the governing body.

(b) Prior to the amendment of a general plan or specific plan, or the adoption or approval of a zoning ordinance or building regulation within the planning boundary established by the airport land use commission pursuant to Section 21675, the local agency shall first refer the proposed action to the commission. If the commission determines that the proposed action is inconsistent with the commission's plan, the referring agency shall be notified. The local agency may, after a public hearing, propose to overrule the commission by a two-thirds vote of its governing body if it makes specific findings that the proposed action is consistent with the purposes of this article stated in Section 21670. At least 45 days prior to the decision to overrule the commission, the local agency governing body shall provide the commission and the division a copy of the proposed decision and findings. The commission and the division may provide comments to the local agency governing body within 30 days of receiving the proposed decision and findings. If the commission or the division's comments are not available within this time limit, the local agency governing body may act without them. The comments by the division or the commission are advisory to the local agency governing body. The local agency governing body shall include comments from the commission and the division in the public record of any final decision to overrule the commission, which may only be adopted by a two-thirds vote of the governing body.

(c) Each public agency owning any airport within the boundaries of an airport land use compatibility plan shall, prior to modification of its airport master plan, refer any proposed change to the airport land use commission. If the commission determines that the proposed action is inconsistent with the commission's plan, the referring agency shall be notified. The public agency may, after a public hearing, propose to overrule the commission by a two-thirds vote of its governing body if it makes specific findings that the proposed action is consistent with the purposes of this article stated in Section 21670. At least 45 days prior to the decision to overrule the commission, the public agency governing body shall provide the commission and the division a copy of the proposed

decision and findings. The commission and the division may provide comments to the public agency governing body within 30 days of receiving the proposed decision and findings. If the commission or the division's comments are not available within this time limit, the public agency governing body may act without them. The comments by the division or the commission are advisory to the public agency governing body. The public agency governing body shall include comments from the commission and the division in the final decision to overrule the commission, which may only be adopted by a two-thirds vote of the governing body.

(d) Each commission determination pursuant to subdivision (b) or (c) shall be made within 60 days from the date of referral of the proposed action. If a commission fails to make the determination within that period, the proposed action shall be deemed consistent with the airport land use compatibility plan.

21676.5. Review of Local Plans

(a) If the commission finds that a local agency has not revised its general plan or specific plan or overruled the commission by a two-thirds vote of its governing body after making specific findings that the proposed action is consistent with the purposes of this article as stated in Section 21670, the commission may require that the local agency submit all subsequent actions, regulations, and permits to the commission for review until its general plan or specific plan is revised or the specific findings are made. If, in the determination of the commission, an action, regulation, or permit of the local agency is inconsistent with the airport land use compatibility plan, the local agency shall be notified and that local agency shall hold a hearing to reconsider its plan. The local agency may propose to overrule the commission after the hearing by a two-thirds vote of its governing body if it makes specific findings that the proposed action is consistent with the purposes of this article as stated in Section 21670. At least 45 days prior to the decision to overrule the commission, the local agency governing body shall provide the commission and the division a copy of the proposed decision and findings. The commission and the division may provide comments to the local agency governing body within 30 days of receiving the proposed decision and findings. If the commission or the division's comments are not available within this time limit, the local agency governing body may act without them. The comments by the division or the commission are advisory to the local agency governing body. The local agency governing body shall include comments from the commission and the division in the final decision to overrule the commission, which may only be adopted by a two-thirds vote of the governing body.

(b) Whenever the local agency has revised its general plan or specific plan or has overruled the commission pursuant to subdivision (a), the proposed action of the local agency shall not be subject to further commission review, unless the commission and the local agency agree that individual projects shall be reviewed by the commission.

21677. Marin County Override Provisions

Notwithstanding the two-thirds vote required by Section 21676, any public agency in the County of Marin may overrule the Marin County Airport Land Use Commission by a majority vote of its governing body. At least 45 days prior to the decision to overrule the commission, the public agency governing body shall provide the commission and the division a copy of the proposed decision and findings. The commission and the division may provide comments to the public agency governing body within 30 days of receiving the proposed decision and findings. If the commission or the division's comments are not available within this time limit, the public agency

governing body may act without them. The comments by the division or the commission are advisory to the public agency governing body. The public agency governing body shall include comments from the commission and the division in the public record of the final decision to overrule the commission, which may be adopted by a majority vote of the governing body.

21678. Airport Owner's Immunity

With respect to a publicly owned airport that a public agency does not operate, if the public agency pursuant to Section 21676, 21676.5, or 21677 overrules a commission's action or recommendation, the operator of the airport shall be immune from liability for damages to property or personal injury caused by or resulting directly or indirectly from the public agency's decision to overrule the commission's action or recommendation.

21679. Court Review

(a) In any county in which there is no airport land use commission or other body designated to assume the responsibilities of an airport land use commission, or in which the commission or other designated body has not adopted an airport land use compatibility plan, an interested party may initiate proceedings in a court of competent jurisdiction to postpone the effective date of a zoning change, a zoning variance, the issuance of a permit, or the adoption of a regulation by a local agency, that directly affects the use of land within one mile of the boundary of a public airport within the county.

(b) The court may issue an injunction that postpones the effective date of the zoning change, zoning variance, permit, or regulation until the governing body of the local agency that took the action does one of the following:

(1) In the case of an action that is a legislative act, adopts a resolution declaring that the proposed action is consistent with the purposes of this article stated in Section 21670.

(2) In the case of an action that is not a legislative act, adopts a resolution making findings based on substantial evidence in the record that the proposed action is consistent with the purposes of this article stated in Section 21670.

(3) Rescinds the action.

(4) Amends its action to make it consistent with the purposes of this article stated in Section 21670, and complies with either paragraph (1) or (2), whichever is applicable.

(c) The court shall not issue an injunction pursuant to subdivision (b) if the local agency that took the action demonstrates that the general plan and any applicable specific plan of the agency accomplishes the purposes of an airport land use compatibility plan as provided in Section 21675.

(d) An action brought pursuant to subdivision (a) shall be commenced within 30 days of the decision or within the appropriate time periods set by Section 21167 of the Public Resources Code, whichever is longer.

(e) If the governing body of the local agency adopts a resolution pursuant to subdivision (b) with respect to a publicly owned airport that the local agency does not operate, the operator of the airport shall be immune from liability for damages to property or personal injury from the local agency's decision to proceed with the zoning change, zoning variance, permit, or regulation.

(f) As used in this section, "interested party" means any owner of land within two miles of the boundary of the airport or any organization with a demonstrated interest in airport safety and efficiency.

21679.5. Deferral of Court Review

(a) Until June 30, 1991, no action pursuant to Section 21679 to postpone the effective date of a zoning change, a zoning variance, the issuance of a permit, or the adoption of a regulation by a local agency, directly affecting the use of land within one mile of the boundary of a public airport, shall be commenced in any county in which the commission or other designated body has not adopted an airport land use compatibility plan, but is making substantial progress toward the completion of the airport land use compatibility plan.

(b) If a commission has been prevented from adopting the airport land use compatibility plan by June 30, 1991, or if the adopted airport land use compatibility plan could not become effective, because of a lawsuit involving the adoption of the airport land use compatibility plan, the June 30, 1991, date in subdivision (a) shall be extended by the period of time during which the lawsuit was pending in a court of competent jurisdiction.

(c) Any action pursuant to Section 21679 commenced prior to January 1, 1990, in a county in which the commission or other designated body has not adopted an airport land use compatibility plan, but is making substantial progress toward the completion of the airport land use compatibility plan, which has not proceeded to final judgment, shall be held in abeyance until June 30, 1991. If the commission or other designated body adopts an airport land use compatibility plan on or before June 30, 1991, the action shall be dismissed. If the commission or other designated body does not adopt an airport land use compatibility plan on or before June 30, 1991, the plaintiff or plaintiffs may proceed with the action.

(d) An action to postpone the effective date of a zoning change, a zoning variance, the issuance of a permit, or the adoption of a regulation by a local agency, directly affecting the use of land within one mile of the boundary of a public airport for which an airport land use compatibility plan has not been adopted by June 30, 1991, shall be commenced within 30 days of June 30, 1991, or within 30 days of the decision by the local agency, or within the appropriate time periods set by Section 21167 of the Public Resources Code, whichever date is later.

AERONAUTICS LAW
PUBLIC UTILITIES CODE
Division 9, Part 1
Chapter 3—Regulations of Aeronautics
(excerpts)

21402. Ownership; Prohibited Use of Airspace

The ownership of the space above the land and waters of this State is vested in the several owners of the surface beneath, subject to the right of flight described in Section 21403. No use shall be made of such airspace which would interfere with such right of flight; provided, that any use of property in conformity with an original zone of approach of an airport shall not be rendered unlawful by reason of a change in such zone of approach.

21403. Lawful Flight; Flight Within Airport Approach Zone

(a) Flight in aircraft over the land and waters of this state is lawful, unless at altitudes below those prescribed by federal authority, or unless conducted so as to be imminently dangerous to persons or property lawfully on the land or water beneath. The landing of an aircraft on the land or waters of another, without his or her consent, is unlawful except in the case of a forced landing or pursuant to Section 21662.1. The owner, lessee, or operator of the aircraft is liable, as provided by law, for damages caused by a forced landing.

(b) The landing, takeoff, or taxiing of an aircraft on a public freeway, highway, road, or street is unlawful except in the following cases:

(1) A forced landing.

(2) A landing during a natural disaster or other public emergency if the landing has received prior approval from the public agency having primary jurisdiction over traffic upon the freeway, highway, road, or street.

(3) When the landing, takeoff, or taxiing has received prior approval from the public agency having primary jurisdiction over traffic upon the freeway, highway, road or street.

The prosecution bears the burden of proving that none of the exceptions apply to the act which is alleged to be unlawful.

(c) The right of flight in aircraft includes the right of safe access to public airports, which includes the right of flight within the zone of approach of any public airport without restriction or hazard. The zone of approach of an airport shall conform to the specifications of Part 77 of the Federal Aviation Regulations of the Federal Aviation Administration, Department of Transportation.

AERONAUTICS LAW

PUBLIC UTILITIES CODE
Division 9, Part 1
Chapter 4—Airports and Air Navigation Facilities

Article 2.7
REGULATION OF OBSTRUCTIONS
(excerpts)

21655. Proposed Site for Construction of State Building Within Two Miles of Airport Boundary

Notwithstanding any other provision of law, if the proposed site of any state building or other enclosure is within two miles, measured by air line, of that point on an airport runway, or runway proposed by an airport master plan, which is nearest the site, the state agency or office which proposes to construct the building or other enclosure shall, before acquiring title to property for the new state building or other enclosure site or for an addition to a present site, notify the Department of Transportation, in writing, of the proposed acquisition. The department shall investigate the proposed site and, within 30 working days after receipt of the notice, shall submit to the state agency or office which proposes to construct the building or other enclosure a written report of the investigation and its recommendations concerning acquisition of the site.

If the report of the department does not favor acquisition of the site, no state funds shall be expended for the acquisition of the new state building or other enclosure site, or the expansion of the present site, or for the construction of the state building or other enclosure, provided that the provisions of this section shall not affect title to real property once it is acquired.

21658. Construction of Utility Pole or Line in Vicinity of Aircraft Landing Area

No public utility shall construct any pole, pole line, distribution or transmission tower, or tower line, or substation structure in the vicinity of the exterior boundary of an aircraft landing area of any airport open to public use, in a location with respect to the airport and at a height so as to constitute an obstruction to air navigation, as an obstruction is defined in accordance with Part 77 of the Federal Aviation Regulations, Federal Aviation Administration, or any corresponding rules or regulations of the Federal Aviation Administration, unless the Federal Aviation Administration has determined that the pole, line, tower, or structure does not constitute a hazard to air navigation. This section shall not apply to existing poles, lines, towers, or structures or to the repair, replacement, or reconstruction thereof if the original height is not materially exceeded and this section shall not apply unless just compensation shall have first been paid to the public utility by the owner of any airport for any property or property rights which would be taken or damaged hereby.

21659. Hazards Near Airports Prohibited

(a) No person shall construct or alter any structures or permit any natural growth to grow at a height which exceeds the obstruction standards set forth in the regulations of the Federal Aviation Administration relating to objects affecting navigable airspace contained in Title 14 of the Code of Federal Regulations, Part 77, Subpart C, unless a permit allowing the construction, alteration, or growth is issued by the department.

(b) The permit is not required if the Federal Aviation Administration has determined that the construction, alteration, or growth does not constitute a hazard to air navigation or would

not create an unsafe condition for air navigation. Subdivision (a) does not apply to a pole, pole line, distribution or transmission tower, or tower line or substation of a public utility.

(c) Section 21658 is applicable to subdivision (b).

AERONAUTICS LAW
PUBLIC UTILITIES CODE
Division 9, Part 1, Chapter 4
Article 3
REGULATION OF AIRPORTS
(excerpts)

21661.5. City Council or Board of Supervisors and ALUC Approvals

(a) No political subdivisions, any of its officers or employees, or any person may submit any application for the construction of a new airport to any local, regional, state, or federal agency unless the plan for construction is first approved by the board of supervisors of the county, or the city council of the city, in which the airport is to be located and unless the plan is submitted to the appropriate commission exercising powers pursuant to Article 3.5 (commencing with Section 21670) of Chapter 4 of Part 1 of Division 9, and acted upon by that commission in accordance with the provisions of that article.

(b) A county board of supervisors or a city council may, pursuant to Section 65100 of the Government Code, delegate its responsibility under this section for the approval of a plan for construction of new helicopter landing and takeoff areas, to the county or city planning agency.

21664.5 Amended Airport Permits; Airport Expansion Defined

(a) An amended airport permit shall be required for every expansion of an existing airport. An applicant for an amended airport permit shall comply with each requirement of this article pertaining to permits for new airports. The department may by regulation provide for exemptions from the operation of this section pursuant to Section 21661, except that no exemption shall be made limiting the applicability of subdivision (e) of Section 21666, pertaining to environmental considerations, including the requirement for public hearings in connection therewith.

(b) As used in this section, "airport expansion" includes any of the following:

(1) The acquisition of runway protection zones, as defined in Federal Aviation Administration Advisory Circular 150/1500-13, or of any interest in land for the purpose of any other expansion as set forth in this section.

(2) The construction of a new runway.

(3) The extension or realignment of an existing runway.

(4) Any other expansion of the airport's physical facilities for the purpose of accomplishing or which are related to the purpose of paragraph (1), (2), or (3).

(c) This section does not apply to any expansion of an existing airport if the expansion commenced on or prior to the effective date of this section and the expansion met the approval, on or prior to that effective date, of each governmental agency that required the approval by law.

PLANNING AND ZONING LAW
GOVERNMENT CODE
Title 7—Planning and Land Use
Division 1—Planning and Zoning
Chapter 3—Local Planning
Article 5
AUTHORITY FOR AND SCOPE OF GENERAL PLANS
(excerpts)

65302.3. General and Applicable Specific Plans; Consistency with Airport Land Use Plans; Amendment; Nonoccurrence Findings

(a) The general plan, and any applicable specific plan prepared pursuant to Article 8 (commencing with Section 65450), shall be consistent with the plan adopted or amended pursuant to Section 21675 of the Public Utilities Code.

(b) The general plan, and any applicable specific plan, shall be amended, as necessary, within 180 days of any amendment to the plan required under Section 21675 of the Public Utilities Code.

(c) If the legislative body does not concur with any provision of the plan required under Section 21675 of the Public Utilities Code, it may satisfy the provisions of this section by adopting findings pursuant to Section 21676 of the Public Utilities Code.

(d) In each county where an airport land use commission does not exist, but where there is a military airport, the general plan, and any applicable specific plan prepared pursuant to Article 8 (commencing with Section 65450), shall be consistent with the safety and noise standards in the Air Installation Compatible Use Zone prepared for that military airport.

PLANNING AND ZONING LAW
GOVERNMENT CODE
Title 7, Division 1
Chapter 4.5—Review and Approval of Development Projects
Article 3
APPLICATION FOR DEVELOPMENT PROJECTS
(excerpts)

65943. Completeness of Application; Determination; Submission of Additional Materials; Appeal; Extension of Time Limits; Fees

(a) Not later than 30 calendar days after any public agency has received an application for a development project, the agency shall determine in writing whether the application is complete and shall immediately transmit the determination to the applicant for the development project. If the written determination is not made within 30 days after receipt of the application, and the application includes a statement that it is an application for a development permit, the application shall be deemed complete for purposes of this chapter. Upon receipt of any re-submittal of the application, a new 30-day period shall begin, during which the public agency shall determine the completeness of the application. If the application is determined not to be complete, the agency's determination shall specify those parts of the application which are incomplete and shall indicate the manner in which they can be made complete, including a list and thorough description of the specific information needed to complete the application. The applicant shall submit materials to the public agency in response to the list and description.

(b) Not later than 30 calendar days after receipt of the submitted materials, the public agency shall determine in writing whether they are complete and shall immediately transmit that determination to the applicant. If the written determination is not made within that 30-day period, the application together with the submitted materials shall be deemed complete for purposes of this chapter.

(c) If the application together with the submitted materials are determined not to be complete pursuant to subdivision (b), the public agency shall provide a process for the applicant to appeal that decision in writing to the governing body of the agency or, if there is no governing body, to the director of the agency, as provided by that agency. A city or county shall provide that the right of appeal is to the governing body or, at their option, the planning commission, or both.

There shall be a final written determination by the agency on the appeal not later than 60 calendar days after receipt of the applicant's written appeal. The fact that an appeal is permitted to both the planning commission and to the governing body does not extend the 60-day period. Notwithstanding a decision pursuant to subdivision (b) that the application and submitted materials are not complete, if the final written determination on the appeal is not made within that 60-day period, the application with the submitted materials shall be deemed complete for the purposes of this chapter.

(d) Nothing in this section precludes an applicant and a public agency from mutually agreeing to an extension of any time limit provided by this section.

(e) A public agency may charge applicants a fee not to exceed the amount reasonably necessary to provide the service required by this section. If a fee is charged pursuant to

this section, the fee shall be collected as part of the application fee charged for the development permit.

65943.5. Environmental Permit Applications; Appeals

(a) Notwithstanding any other provision of this chapter, any appeal pursuant to subdivision (c) of Section 65943 involving a permit application to a board, office, or department within the California Environmental Protection Agency shall be made to the Secretary for Environmental Protection.

(b) Notwithstanding any other provision of this chapter, any appeal pursuant to subdivision (c) of Section 65943 involving an application for the issuance of an environmental permit from an environmental agency shall be made to the Secretary for Environmental Protection under either of the following circumstances:

(1) The environmental agency has not adopted an appeals process pursuant to subdivision (c) of Section 65943.

(2) The environmental agency declines to accept an appeal for a decision pursuant to subdivision (c) of Section 65943.

(c) For purposes of subdivision (b), "environmental permit" has the same meaning as defined in Section 71012 of the Public Resources Code, and "environmental agency" has the same meaning as defined in Section 71011 of the Public Resources Code, except that "environmental agency" does not include the agencies described in subdivisions (c) and (h) of Section 71011 of the Public Resources Code.

65944. Acceptance of application as complete; requests for additional information; restrictions; prior notice of necessary information; Proximity to Military Installation or Special Use Airspace

(a) After a public agency accepts an application as complete, the agency shall not subsequently request of an applicant any new or additional information which was not specified in the list prepared pursuant to Section 65940. The agency may, in the course of processing the application, request the applicant to clarify, amplify, correct, or otherwise supplement the information required for the application.

(b) The provisions of subdivision (a) shall not be construed as requiring an applicant to submit with his or her initial application the entirety of the information which a public agency may require in order to take final action on the application. Prior to accepting an application, each public agency shall inform the applicant of any information included in the list prepared pursuant to Section 65940 which will subsequently be required from the applicant in order to complete final action on the application.

(c) This section shall not be construed as limiting the ability of a public agency to request and obtain information which may be needed in order to comply with the provisions of Division 13 (commencing with Section 21000) of the Public Resources Code.

65945. Requests for Notice of Proposal to Adopt or Amend Certain Plans or Ordinances By City or County; Subscription to Periodically Updated Notice as Alternative; Fees

(a) At the time of filing an application for a development permit with a city or county, the city or county shall inform the applicant that he or she may make a written request to

receive notice from the city or county of a proposal to adopt or amend any of the following plans or ordinances:

(1) A general plan.

(2) A specific plan.

(3) A zoning ordinance.

(4) An ordinance affecting building permits or grading permits.

The applicant shall specify, in the written request, the types of proposed action for which notice is requested. Prior to taking any of those actions, the city or county shall give notice to any applicant who has requested notice of the type of action proposed and whose development project is pending before the city or county if the city or county determines that the proposal is reasonably related to the applicant's request for the development permit. Notice shall be given only for those types of actions which the applicant specifies in the request for notification.

The city or county may charge the applicant for a development permit, to whom notice is provided pursuant to this subdivision, a reasonable fee not to exceed the actual cost of providing that notice. If a fee is charged pursuant to this subdivision, the fee shall be collected as part of the application fee charged for the development permit.

(b) As an alternative to the notification procedure prescribed by subdivision (a), a city or county may inform the applicant at the time of filing an application for a development permit that he or she may subscribe to a periodically updated notice or set of notices from the city or county which lists pending proposals to adopt or amend any of the plans or ordinances specified in subdivision (a), together with the status of the proposal and the date of any hearings thereon which have been set.

Only those proposals which are general, as opposed to parcel-specific in nature, and which the city or county determines are reasonably related to requests for development permits, need be listed in the notice. No proposal shall be required to be listed until such time as the first public hearing thereon has been set. The notice shall be updated and mailed at least once every six weeks; except that a notice need not be updated and mailed until a change in its contents is required.

The city or county may charge the applicant for a development permit, to whom notice is provided pursuant to this subdivision, a reasonable fee not to exceed the actual cost of providing that notice, including the costs of updating the notice, for the length of time the applicant requests to be sent the notice or notices.

65945.3. Notice of Proposal to Adopt or Amend Rules or Regulations Affecting Issuance of Permits by Local Agency other than City or County; Fee

At the time of filing an application for a development permit with a local agency, other than a city or county, the local agency shall inform the applicant that he or she may make a written request to receive notice of any proposal to adopt or amend a rule or regulation affecting the issuance of development permits.

Prior to adopting or amending any such rule or regulation, the local agency shall give notice to any applicant who has requested such notice and whose development project is pending before

the agency if the local agency determines that the proposal is reasonably related to the applicant's request for the development permit.

The local agency may charge the applicant for a development permit, to whom notice is provided pursuant to this section, a reasonable fee not to exceed the actual cost of providing that notice. If a fee is charged pursuant to this section, the fee shall be collected as part of the application fee charged for the development permit.

65945.5. Notice of Proposal to Adopt or Amend Regulation Affecting Issuance of Permits and Which Implements Statutory Provision by State Agency

At the time of filing an application for a development permit with a local agency, other than a city or county, the local agency shall inform the applicant that he or she may make a written request to receive notice of any proposal to adopt or amend a rule or regulation affecting the issuance of development permits.

Prior to adopting or amending any such rule or regulation, the local agency shall give notice to any applicant who has requested such notice and whose development project is pending before the agency if the local agency determines that the proposal is reasonably related to the applicant's request for the development permit.

The local agency may charge the applicant for a development permit, to whom notice is provided pursuant to this section, a reasonable fee not to exceed the actual cost of providing that notice. If a fee is charged pursuant to this section, the fee shall be collected as part of the application fee charged for the development permit.

65945.7. Actions, Inactions, or Recommendations Regarding Ordinances, Rules or Regulations; Invalidity or Setting Aside Ground of Error Only if Prejudicial

No action, inaction, or recommendation regarding any ordinance, rule, or regulation subject to this Section 65945, 65945.3, or 65945.5 by any legislative body, administrative body, or the officials of any state or local agency shall be held void or invalid or be set aside by any court on the ground of any error, irregularity, informality, neglect or omission (hereinafter called "error") as to any matter pertaining to notices, records, determinations, publications or any matters of procedure whatever, unless after an examination of the entire case, including evidence, the court shall be of the opinion that the error complained of was prejudicial, and that by reason of such error the party complaining or appealing sustained and suffered substantial injury, and that a different result would have been probable if such error had not occurred or existed. There shall be no presumption that error is prejudicial or that injury was done if error is shown.

PLANNING AND ZONING LAW
GOVERNMENT CODE
Title 7, Division 1
Chapter 9.3—Mediation and Resolution of Land Use Disputes
(excerpts)

66030. Legislative Findings and Intent

(a) The Legislature finds and declares all of the following:

(1) Current law provides that aggrieved agencies, project proponents, and affected residents may bring suit against the land use decisions of state and local governmental agencies. In practical terms, nearly anyone can sue once a project has been approved.

(2) Contention often arises over projects involving local general plans and zoning, redevelopment plans, the California Environmental Quality Act (Division 13 (commencing with Section 21000) of the Public Resources Code), development impact fees, annexations and incorporations, and the Permit Streamlining Act (Chapter 4.5 (commencing with Section 65920)).

(3) When a public agency approves a development project that is not in accordance with the law, or when the prerogative to bring suit is abused, lawsuits can delay development, add uncertainty and cost to the development process, make housing more expensive, and damage California's competitiveness. This litigation begins in the superior court, and often progresses on appeal to the Court of Appeal and the Supreme Court, adding to the workload of the state's already overburdened judicial system.

(b) It is, therefore, the intent of the Legislature to help litigants resolve their differences by establishing formal mediation processes for land use disputes. In establishing these mediation processes, it is not the intent of the Legislature to interfere with the ability of litigants to pursue remedies through the courts.

66031. Actions Subject to Mediation Proceeding; Selecting a Mediator; Considerations; Failure to Select a Mediator

(a) Notwithstanding any other provision of law, any action brought in the superior court relating to any of the following subjects may be subject to a mediation proceeding conducted pursuant to this chapter:

(1) The approval or denial by a public agency of any development project.

(2) Any act or decision of a public agency made pursuant to the California Environmental Quality Act (Division 13 (commencing with Section 21000) of the Public Resources Code).

(3) The failure of a public agency to meet the time limits specified in Chapter 4.5 (commencing with Section 65920), commonly known as the Permit Streamlining Act, or in the Subdivision Map Act (Division 2 (commencing with Section 66410)).

(4) Fees determined pursuant to Sections 53080 to 53082, inclusive, or Chapter 4.9 (commencing with Section 65995).

(5) Fees determined pursuant to Chapter 5 (commencing with Section 66000).

(6) The adequacy of a general plan or specific plan adopted pursuant to Chapter 3 (commencing with Section 65100).

(7) The validity of any sphere of influence, urban service area, change of organization or reorganization, or any other decision made pursuant to the Cortese-Knox-Hertzberg Local Government Reorganization Act of 2000 (Division 3 (commencing with Section 56000) of Title 5).

(8) The adoption or amendment of a redevelopment plan pursuant to the Community Redevelopment Law (Part 1 (commencing with Section 33000) of Division 24 of the Health and Safety Code).

(9) The validity of any zoning decision made pursuant to Chapter 4 (commencing with Section 65800).

(10) The validity of any decision made pursuant to Article 3.5 (commencing with Section 21670) of Chapter 4 of Part 1 of Division 9 of the Public Utilities Code.

(b) Within five days after the deadline for the respondent or defendant to file its reply to an action, the court may invite the parties to consider resolving their dispute by selecting a mutually acceptable person to serve as a mediator, or an organization or agency to provide a mediator.

(c) In selecting a person to serve as a mediator, or an organization or agency to provide a mediator, the parties shall consider the following:

(1) The council of governments having jurisdiction in the county where the dispute arose.

(2) Any sub-regional or countywide council of governments in the county where the dispute arose.

(3) Any other person with experience or training in mediation including those with experience in land use issues, or any other organization or agency that can provide a person with experience or training in mediation, including those with experience in land use issues.

(d) If the court invites the parties to consider mediation, the parties shall notify the court within 30 days if they have selected a mutually acceptable person to serve as a mediator. If the parties have not selected a mediator within 30 days, the action shall proceed. The court shall not draw any implication, favorable or otherwise, from the refusal by a party to accept the invitation by the court to consider mediation. Nothing in this section shall preclude the parties from using mediation at any other time while the action is pending.

PLANNING AND ZONING LAW
GOVERNMENT CODE
Title 7—Planning and Land Use
Division 2—Subdivisions
Chapter 3—Procedure
Article 3
REVIEW OF TENTATIVE MAP BY OTHER AGENCIES
(excerpts)

66455.9. Potential Public School sites; Notice; Investigation

Whenever there is consideration of an area within a development for a public school site, the advisory agency shall give the affected districts and the State Department of Education written notice of the proposed site. The written notice shall include the identification of any existing or proposed runways within the distance specified in Section 17215 of the Education Code. If the site is within the distance of an existing or proposed airport runway as described in Section 17215 of the Education Code, the department shall notify the State Department of Transportation as required by the section and the site shall be investigated by the State Department of Transportation required by Section 17215.

EDUCATION CODE
Title 1—General Education Code Provisions
Division 1—General Education Code Provisions
Part 10.5—School Facilities
Chapter 1—School Sites
Article 1
GENERAL PROVISIONS
(excerpts)

17215. Site Near Airport

(a) In order to promote the safety of pupils, comprehensive community planning, and greater educational usefulness of school sites, before acquiring title to or leasing property for a new school site, the governing board of each school district, including any district governed by a city board of education, or a charter school, shall give the State Department of Education written notice of the proposed acquisition or lease and shall submit any information required by the State Department of Education if the site is within two miles, measured by air line, of that point on an airport runway or a potential runway included in an airport master plan that is nearest to the site.

(b) Upon receipt of the notice required pursuant to subdivision (a), the State Department of Education shall notify the Department of Transportation in writing of the proposed acquisition or lease. If the Department of Transportation is no longer in operation, the State Department of Education shall, in lieu of notifying the Department of Transportation, notify the United States Department of Transportation or any other appropriate agency, in writing, of the proposed acquisition or lease for the purpose of obtaining from the department or other agency any information or assistance that it may desire to give.

(c) The Department of Transportation shall investigate the site and, within 30 working days after receipt of the notice, shall submit to the State Department of Education a written report of its findings including recommendations concerning acquisition or lease of the site. As part of the investigation, the Department of Transportation shall give notice thereof to the owner and operator of the airport who shall be granted the opportunity to comment upon the site. The Department of Transportation shall adopt regulations setting forth the criteria by which a site will be evaluated pursuant to this section.

(d) The State Department of Education shall, within 10 days of receiving the Department of Transportation's report, forward the report to the governing board of the school district or charter school. The governing board or charter school may not acquire title to or lease the property until the report of the Department of Transportation has been received. If the report does not favor the acquisition or lease of the property for a school site or an addition to a present school site, the governing board or charter school may not acquire title to or lease the property. If the report does favor the acquisition or lease of the property for a school site or an addition to a present school site, the governing board or charter school shall hold a public hearing on the matter prior to acquiring or leasing the site.

(e) If the Department of Transportation's recommendation does not favor acquisition or lease of the proposed site, state funds or local funds may not be apportioned or expended for the acquisition or lease of that site, construction of any school building on that site, or for the expansion of any existing site to include that site.

(f) This section does not apply to sites acquired prior to January 1, 1966, nor to any additions or extensions to those sites.

EDUCATION CODE
Title 3—Postsecondary Education
Division 7—Community Colleges
Part 49—Community Colleges, Education Facilities
Chapter 1—School Sites
Article 2
SCHOOL SITES
(excerpts)

81033. Investigation: Geologic and Soil Engineering Studies; Airport in Proximity

(c) To promote the safety of students, comprehensive community planning, and greater educational usefulness of community college sites, the governing board of each community college district, if the proposed site is within two miles, measured by air line, of that point on an airport runway, or runway proposed by an airport master plan, which is nearest the site and excluding them if the property is not so located, before acquiring title to property for a new community college site or for an addition to a present site, shall give the board of governors notice in writing of the proposed acquisition and shall submit any information required by the board of governors.

Immediately after receiving notice of the proposed acquisition of property which is within two miles, measured by air line, of that point on an airport runway, or runway proposed by an airport master plan, which is nearest the site, the board of governors shall notify the Division of Aeronautics of the Department of Transportation, in writing, of the proposed acquisition. The Division of Aeronautics shall make an investigation and report to the board of governors within 30 working days after receipt of the notice. If the Division of Aeronautics is no longer in operation, the board of governors, in lieu of notifying the Division of Aeronautics, shall notify the Federal Aviation Administration or any other appropriate agency, in writing, of the proposed acquisition for the purpose of obtaining from the authority or other agency any information or assistance it may desire to give.

The board of governors shall investigate the proposed site and, within 35 working days after receipt of the notice, shall submit to the governing board a written report and its recommendations concerning acquisition of the site. The governing board shall not acquire title to the property until the report of the board of governors has been received. If the report does not favor the acquisition of the property for a community college site or an addition to a present community college site, the governing board shall not acquire title to the property until 30 days after the department's report is received and until the board of governors' report has been read at a public hearing duly called after 10 days' notice published once in a newspaper of general circulation within the community college district, or if there is no such newspaper, then in a newspaper of general circulation within the county in which the property is located.

(d) If, with respect to a proposed site located within two miles of an operative airport runway, the report of the board of governors submitted to a community college district governing board under subdivision (c) does not favor the acquisition of the site on the sole or partial basis of the unfavorable recommendation of the Division of Aeronautics of the Department of Transportation, no state agency or officer shall grant, apportion, or allow to that community college district for expenditure in connection with that site, any state funds otherwise made available under any state law whatever for community college site acquisition or college building construction, or for expansion of existing sites and

buildings, and no funds of the community college district or of the county in which the district lies shall be expended for those purposes. However, this section shall not be applicable to sites acquired prior to January 1, 1966, or to any additions or extensions to those sites.

If the recommendation of the Division of Aeronautics is unfavorable, the recommendation shall not be overruled without the express approval of the board of governors and the State Allocation Board.

PUBLIC RESOURCES CODE
California Environmental Quality Act Statutes
Chapter 2.6—General
(excerpts)

21096. Technical Resources to Assist in Preparation of Environmental Impact Report as it Relates to Airport-Related Safety Hazards and Noise Problems; Use of Airport Land Use Planning Handbook; Negative Declaration for a Project

(a) If a lead agency prepares an environmental impact report for a project situated within airport land use compatibility plan boundaries, or, if an airport land use compatibility plan has not been adopted, for a project within two nautical miles of a public airport or public use airport, the Airport Land Use Planning Handbook published by the Division of Aeronautics of the Department of Transportation, in compliance with Section 21674.5 of the Public Utilities Code and other documents, shall be utilized as technical resources to assist in the preparation of the environmental impact report as the report relates to airport-related safety hazards and noise problems.

(b) A lead agency shall not adopt a negative declaration for a project described in subdivision (a) unless the lead agency considers whether the project will result in a safety hazard or noise problem for persons using the airport or for persons residing or working in the project area.

Business and Professions Code
Section 11000 – 11010
(excerpts)

11000.

(a) "Subdivided lands" and "subdivision" refer to improved or unimproved lands or lands, wherever situated within California, divided or proposed to be divided for the purpose of sale or lease or financing, whether immediate or future, into five or more lots or parcels. However, land or lands sold by lots or parcels of not less than 160 acres which are designated by lot or parcel description by government surveys and appear as such on the current assessment roll of the county in which the land or lands are situated shall not be deemed to be "subdivided lands" or "a subdivision" within the meaning of this section, unless the land or lands are divided or proposed to be divided for the purpose of sale for oil and gas purposes, in which case the land or lands shall be deemed to be "subdivided lands" or "a subdivision" within the meaning of this section. This chapter also does not apply to the leasing of apartments, offices, stores, or similar space within an apartment building, industrial building, commercial building, or mobile home park, as defined under Section 18214 of the Health and Safety Code, except that the offering of leases for a term in excess of five years to tenants within a mobile home park as a mandatory requirement and prerequisite to tenancy within the mobile home park shall be subject to the provisions of this chapter. The leasing of apartments in a community apartment project, as defined in Section 11004 in an apartment or similar space within a commercial building or complex, shall be subject to the provisions of this chapter.

(b) Nothing in this section shall in any way modify or affect any of the provisions of Section 66424 of the Government Code.

(c) Subdivisions, as defined in Section 10249.1, which are located entirely outside California shall be exempt from the provisions of this part.

11000.1.

(a) "Subdivided lands" and "subdivision", as defined by Sections 11000 and 1104.5, also include improved or unimproved land or lands, a lot or lots, or a parcel or parcels, of any size, in which, for the purpose of sale or lease of financing, whether immediate or future, five or more undivided interests are created or are proposed to be created.

(b) This section does not apply to the creation or proposed creation of undivided interests in land if any one of the following conditions exists:

(1) The undivided interests are held or to be held by persons related one to the other by blood or marriage.

(2) The undivided interests are to be purchased and owned solely by persons who present evidence satisfactory to the Real Estate Commissioner that they are knowledgeable and experienced investors who comprehend the nature and extent of the risks involved in the ownership of these interests. The Real Estate Commissioner shall grant an exemption from this part if the undivided interests are to be purchased by no more than 10 persons, each of whom furnishes a signed statement to the commissioner that he or she:

(A) is fully informed concerning the real property to be acquired and his or her interest in that property including the risks involved in ownership of undivided interests,

(B) is purchasing the interest or interests for his or her own account and with no present intention to resell or otherwise dispose of the interest for value, and

(C) expressly waives protections afforded to a purchaser by this part.

(3) The undivided interests are created as a result of a foreclosure sale.

(4) The undivided interests are created by a valid order or decree of a court.

(5) The offering and sale of the undivided interests have been expressly qualified by the issuance of a permit from the Commissioner of Corporations pursuant to the Corporate Securities Law of 1968 (Division 1 (commencing with Section 25000) of Title 4 of the Corporations Code).

11010.

(a) Except as otherwise provided pursuant to subdivision (c) or elsewhere in this chapter, any person who intends to offer subdivided lands within this state for sale or lease shall file with the Department of Real Estate an application for a public report consisting of a notice of intention and a completed questionnaire on a form prepared by the department.

(b) (13) (A) The location of all existing airports, and of all proposed airports shown on the general plan of any city or county, located within two statute miles of the subdivision. If the property is located within an airport influence area, the following statement shall be included in the notice of intention:

NOTICE OF AIRPORT IN VICINITY

This property is presently located in the vicinity of an airport, within what is known as the airport influence area. For that reason, the property may be subject to some of the annoyances or inconveniences associated with proximity to airport operations (for example: noise, vibration, or odors). Individual sensitivities to those annoyances, if any, are associated with the property before you complete your purchase and determine whether they are acceptable to you.

(B) For purposes of this section, an “airport influence area,” also known as an “airport referral area”, is the area in which current or future airport-related noise, overflight, safety, or airspace protection factors may significantly affect land uses or necessitate restrictions on those uses as determined by an airport land use commission.

LEGISLATIVE HISTORY SUMMARY
PUBLIC UTILITIES CODE
Section 21670 ET SEQ.
Airport land Use Commission Statutes

1967 Original ALUC statute enacted.

- Establishment of ALUCs required in each county containing a public airport served by a certificated air carrier.
- The purpose of ALUCs is indicated as being to make recommendations regarding height restrictions on buildings and the use of land surrounding airports.

1970 Assembly Bill 1856 (Badham) Chapter 1182, Statutes of 1970 — Adds provisions which:

- Require ALUCs to prepare comprehensive land use plans.
- Require such plans to include a long-range plan and to reflect the airport's forecast growth during the next 20 years.
- Require ALUC review of airport construction plans (Section 21661.5).
- Exempt Los Angeles County from the requirement of establishing an ALUC.

1971 The function of ALUCs is restated as being to require new construction to conform to Department of Aeronautics standards.

1973 ALUCs are permitted to establish compatibility plans for military airports.

1982 Assembly Bill 2920 (Rogers) Chapter 1041, Statutes of 1982 — Adds major changes which:

- More clearly articulate the purpose of ALUCs.
- Eliminate reference to "achieve by zoning."
- Require consistency between local general and specific plans and airport land use commission plans; the requirements define the process for attaining consistency, they do not establish standards for consistency.
- Eliminate the requirement for proposed individual development projects to be referred to an ALUC for review once local general/specific plans are consistent with the ALUC's plan.
- Require that local agencies make findings of fact before overriding an ALUC decision.
- Change the vote required for an override from 4/5 to 2/3.

1984 Assembly Bill 3551 (Mountjoy) Chapter 1117, Statutes of 1984 — Amends the law to:

- Require ALUCs in all counties having an airport which serves the general public unless a county and its cities determine an ALUC is not needed.
- Limit amendments to compatibility plans to once per year.
- Allow individual projects to continue to be referred to the ALUC by agreement.
- Extend immunity to airports if an ALUC action is overridden by a local agency not owning the airport.
- Provide state funding eligibility for preparation of compatibility plans through the Regional Transportation Improvement Program process.1987Senate Bill 633 (Rogers) Chapter 1018, Statutes of 1987 — Makes revisions which:
- Require that a designated body serving as an ALUC include two members having "expertise in aviation."

- Allows an interested party to initiate court proceedings to postpone the effective date of a local land use action if a compatibility plan has not been adopted.
- Delete sunset provisions contained in certain clauses of the law.
- Allows reimbursement for ALUC costs in accordance with the Commission on State Mandates.

1989 Senate Bill 255 (Bergeson) Chapter 54, Statutes of 1989 —

- Sets a requirement that comprehensive land use plans be completed by June 1991.
- Establishes a method for compelling ALUCs to act on matters submitted for review.
- Allows ALUCs to charge fees for review of projects.
- Suspends any lawsuits that would stop development until the ALUC adopts its plan or until June 1, 1991.

1989 Senate Bill 235 (Alquist) Chapter 788, Statutes of 1989 — Appropriates $3,672,000 for the payment of claims to counties seeking reimbursement of costs incurred during fiscal years 1985-86 through 1989-90 pursuant to state-mandated requirement (Chapter 1117, Statutes of 1984) for creation of ALUCs in most counties. This statute was repealed in 1993.

1990 Assembly Bill 4164 (Mountjoy) Chapter 1008, Statutes of 1990 — Adds section 21674.5 requiring the Division of Aeronautics to develop and implement a training program for ALUC staffs.

1990 Assembly Bill 4265 (Clute) Chapter 563, Statutes of 1990 — With the concurrence of the Division of Aeronautics, allows ALUCs to use an airport layout plan, rather than a long-range airport master plan, as the basis for preparation of a compatibility plan.

1990 Senate Bill 1288 (Beverly) Chapter 54, Statutes of 1990 — Amends Section 21670.2 to give Los Angeles County additional time to prepare compatibility plans and meet other provisions of the ALUC statutes.

1991 Senate Bill 532 (Bergeson) Chapter 140, Statutes of 1991 —

- Allows counties having half of their compatibility plans completed or under preparation by June 30, 1991, an additional year to complete the remainder.
- Allows ALUCs to continue to charge fees under these circumstances.
- Fees may be charged only until June 30, 1992, if plans are not completed by then.

1993 Senate Bill 443 (Committee on Budget and Fiscal Review) Chapter 59, Statutes of 1993 — Amends Section 21670(b) to make the formation of ALUCs permissive rather than mandatory as of June 30, 1993. (Note: Section 21670.2 which assigns responsibility for coordinating the airport planning of public agencies in Los Angeles County is not affected by this amendment.)

1994 Assembly Bill 2831 (Mountjoy) Chapter 644, Statutes of 1994 — Reinstates the language in Section 21670(b) mandating establishment of ALUCs, but also provides for an alternative airport land use planning process. Lists specific actions which a county and affected cities must take in order for such alternative process to receive Caltrans' approval. Requires that ALUCs be guided by information in the Caltrans' Airport Land Use Planning Handbook when formulating airport land use plans.

1994 Senate Bill 1453 (Rogers) Chapter 438, Statutes of 1994 — Amends Caltrans Environ¬men¬tal Quality Act (CEQA) statutes as applied to preparation of environmental documents affecting projects in the vicinity of airports. Requires lead agencies to use the Airport Land Use Planning Handbook as a technical resource when assessing the airport-related noise and safety impacts of such projects.

1997 Assembly Bill 1130 (Oller) Chapter 81, Statutes of 1997 — Added Section 21670.4 concerning airports whose planning boundary straddles a county line.

2000 Senate Bill 1350 (Rainey) Chapter 506, Statutes of 2000 — Added Section 21670(f) clarifying that special districts are among the local agencies to which airport land use planning laws are intended to apply.

2001 Assembly Bill 93 (Wayne) Chapter 946, Statutes of 2001 — Added Section 21670.3 establishing the San Diego County Regional Airport Authority and assigning it various powers and duties regarding the establishment, planning and operation of airports within the county.

2002 Assembly Bill 3026 (Dutra) Chapter 438, Statutes of 2002 — In all sections where the term "comprehensive land use plan" is used this bill changed it to "airport land use compatibility plan."

2002 Assembly Bill 2776 (Simitian) Chapter 496, Statutes of 2002— Amends Business & Professions code and Civil code. Requires additional notification in real estate transactions regarding a property's proximity to airports and possible associated annoyances.

2002 Senate Bill 1468 (Knight) Chapter 971, Statutes of 2002— Amended Section 21675 requiring airport land use compatibility plans created for military airports to be consistent with the safety and noise standards in the Air Installation Compatible Use Zone prepared for that airport.

2003 Assembly Bill 332 (Mullin) Chapter 351, Statutes of 2003 —

- Clarifies that community college districts and school districts along with special districts are subject to airport land use laws in the State Aeronautics Act.
- Adds that if a local entity proposes to overrule an ALUC decision of incompatible land use then they must notify and provide findings to both the ALUC and Caltrans Aeronautics. Caltrans and the ALUC may provide comments in response and those comments must be made a part of the final local decision.
- Adds that prior to granting building construction permits, local agencies shall be guided by the criteria established in the Airport Land Use Planning Handbook and any related federal aviation regulations to the extent that the criteria has been incorporated into their airport land use compatibility plan.

2007 Senate Bill 10 (Kehoe) Chapter 287, Statutes of 2007 — The San Diego County Regional Airport Authority Reform Act of 2007. Restructures the airport authority established in 2001 by AB 93 (Wayne), with a set of goals related to governance, accountability, planning and operations at San Diego International Airport.

APPENDIX B
Airport Land Use Compatibility Concepts

Introduction

The information provided in this appendix addresses concepts and rationale used during the development of the compatibility policies and figures presented in Chapters 2 and 3 of this CLUP. The foundation for these policies and the concepts behind them derive from the *California Airport Land Use Compatibility Handbook* (Caltrans, January 2002).

As outlined in the *Handbook* and this CLUP, the policies regarding airport land use compatibility are focused into four concepts categories:

1. **Noise** – As defined by cumulative noise exposure contours depicting noise from aircraft operations near an airport.

2. **Safety** – This addresses minimizing risks of aircraft accidents beyond the runway environment, and their potential impacts to the general public in the airport's vicinity.

3. **Airspace Protection** – This is accomplished by placing limits on the height of man-made structures and other objects in the airport vicinity, and restrictions on other uses that potentially pose hazards to flight.

4. **Overflight** – The impacts of aircraft flight over a community.

Noise

Noise is one of the most basic airport land use compatibility concerns. Moreover, at major airline airports, many busy general aviation airports, and most military airfields, noise is often the most recognized impact by the general public.

Compatibility Objective

The purpose of noise compatibility policies s to reduce the number of people exposed to frequent and/ or high levels of airport noise. This is often accomplished by avoiding the establishment of new, noise-sensitive land uses in areas that are exposed to significant levels of aircraft noise.

Measurement

For the purpose of airport land use compatibility planning, noise generated by the operation of aircraft to, from, and around an airport is primarily measured in terms of the cumulative noise levels of all aircraft operations. In California, the cumulative noise level metric established by state regulations, including for airport noise, is the Community Noise Equivalent Level (CNEL). This metric provides a single measure of the average sound level in decibels (dB) to which any point near an airport is exposed.

To reflect assumed greater community sensitivity to nighttime and evening noise, events during these periods are counted as being louder than actually measured due to the fact fewer ambient noises exist as during the daytime. Cumulative noise levels are usually illustrated on airport area maps as contour lines connecting points of equal noise exposure. Mapped noise contours primarily show areas of significant noise exposures – ones affected by high concentrations of aircraft takeoffs and landings.

Calculating cumulative noise levels requires several inputs, including the number, type, and time of day of aircraft operations, the location of flight tracks as well as other data. Airports with air traffic control towers can often provide recorded data, and in most metropolitan areas, noise monitoring and radar flight tracking data is available. An important point to be stressed is that, despite the availability of a multitude of data, the location of noise contours is not necessarily precise. In the best of situations, where extensive noise monitoring and flight track data is available, current contours can be accurate to within ±1 dB. In locations where less data is available, the level of accuracy has generally been found to be ±3 dB.

Compatibility Strategies

The basic strategy for achieving noise compatibility in the vicinity of an airport is to limit development of land uses which are particularly sensitive to noise. Given the effect that varying levels of noise can have on people (see Table B-1), the most acceptable land uses are ones which either involve few people, or generate significant noise levels themselves (such as other transportation facilities or some industrial uses).

On occasion, local considerations outweigh noise impacts and result in decisions by local land use jurisdictions or even ALUCs to allow residential development in locations where this type of use would normally be considered incompatible. In these situations, approval of development should be conditioned upon the dedication of avigation easement and requirements for sufficient acoustic insulation of structures to assure that aircraft noise is reduced to an interior noise level of 45 dB CNEL or less.

TABLE B-1
SUMMARY OF EFFECTS OF NOISE ON PEOPLE

Day-Night Average Sound Level (Decibels)	Effects[1]			
	Hearing Loss (Qualitative Description)	Annoyance[2] (Percentage of Population Highly Annoyed)[3]	Average Community Reaction[4]	General Community Attitude Toward Area
≥75	May begin to occur	37%	Very severe	Noise is likely to be the most important of all adverse aspects of the community environment.
70	Will not likely occur	22%	Severe	Noise is one of the most important adverse aspects of the community environment.
65	Will not occur	12%	Significant	Noise is one of the important adverse aspects of the community environment.
60	Will not occur	7%	Moderate to Slight	Noise may be considered an adverse aspect of the community environment.
≤55	Will not occur	3%		Noise considered no more important than various other environmental factors.

[1] All data is drawn from National Academy of Science 1977 report *Guidelines for Preparing Environmental Impact Statements on Noise*, Report of Working Group 69 on Evaluation of Environmental Impact of Noise.

[2] A summary measure of the general adverse reaction of people to living in noisy environments that cause speech interference; sleep disturbance; desire for tranquil environment; and the inability to use the telephone, radio or television satisfactorily.

[3] The percentage of people reporting annoyance to lesser extents are higher in each case. An unknown small percentage of people will report being "highly annoyed" even in the quietest surroundings. One reason is the difficulty all people have in integrating annoyance over a very long time. USAF Update with 400 points (Finegold et al. 1992)

[4] Attitudes or other non-acoustic factors can modify this. Noise at low levels can still be an important problem, particularly when it intrudes into a quiet environment.

NOTE:
Research implicates noise as a factor producing stress-related health effects such as heart disease, high blood pressure and stroke, ulcers and other digestive disorders. The relationships between noise and these effects, however, have not as yet been conclusively demonstrated. (Thompson 1981; Thompson et al. 1989; CHABA 1981; CHABA 1982; Hattis et al. 1980; and U.S. EPA 1981)

Source: Federal Interagency Committee on Noise (1992)

Source: Caltrans, *California Airport Land Use Planning Handbook*, January 2002.

Basis for Setting Criteria

Compatibility criteria related to cumulative noise levels are well-established in federal and state laws and regulations. The basic state criterion sets a CNEL of 65 dB as the maximum noise level normally compatible with urban residential land uses, though local jurisdictions can institute a lower maximum CNEL for residential land uses. A process called "normalization" is one means of adjusting the criteria to reflect ambient sound levels, the community's previous exposure to noise, and any other local characteristics. This process helps to determine what CNEL is of significance to that particular community. Once the baseline maximum CNEL for residential uses is established, criteria for other land uses can be set in a manner consistent with this starting point.

Safety

In comparison to noise, safety is in many respects a more difficult concern to address in airport land use compatibility policies. The primary reason for this difference is that safety policies address uncertain events which *may occur* with *occasional* aircraft operations, whereas noise policies deal with known, quantifiable, and more or less predictable events which *do occur* with *every* aircraft operation. Because aircraft accidents happen infrequently and the time, place, and consequences of their occurrence cannot be predicted, the concept of "risk" is central to the assessment of safety compatibility. From the standpoint of land use planning, two variables determine the degree of risk posed by potential aircraft accidents:

1. *Accident Frequency* – Where and when aircraft accidents occur in the vicinity of the airport; and

2. *Accident Consequences* – Land uses and land use characteristics which affect the severity of an accident when one occurs.

Compatibility Objective

The main objective of safety compatibility criteria is to simply minimize the risks associated with potential aircraft accidents. This task is made up of two components; 1) safety on the ground; and 2) safety for aircraft occupants. The fundamental objective for providing safety on the ground is to protect people and property in the event of an aircraft accident near an airport. Safety for aircraft occupants involves trying to find ways in which to enhance the chances of survival of occupants of an aircraft involved in an accident beyond the runway environment.

Measurement

Measuring the degree of safety concerns around an airport involves a determination of frequency, or in other words, assessing the potential for an accident to occur. This task includes determining two elements: *where* aircraft accidents are expected to occur, and *when* an accident might happen. Of these two elements, the *where*, or "spatial" element is most meaningful to land use

compatibility planning for a given airport. Looking at nationwide accident data, it is possible to perceive the possible location of aircraft accidents based upon the frequency of occurrence. In contrast, the *when*, or "time" element, is not very useful for land use compatibility planning due to the fact that there are too many unknowns in determining when an aircraft accident might occur.

While the historical number of aircraft accidents nationwide has varied over the years, future trends can nevertheless be predicted with a fair degree of accuracy. Even with respect to specific classes of aviation (air carrier, general aviation, and military) or types of aircraft (business jets, helicopters, etc.), the frequency of accident occurrence is fairly constant and predictable. The difficulty with prediction arises when the focus is on a single airport rather than nationwide data. The *Handbook* presents a set of diagrams indicating where accidents are most likely to occur around general aviation airports. Figure B-2 and 3 show the spatial distribution of general aviation aircraft accidents. (These charts show accident data for *all* general aviation airports. Data on accidents associated with varying runway lengths can be found in the *Handbook*, and was used for the purpose of developing safety criteria for this CLUP.)

From these two charts, several important facts are revealed:

Arrival Accident Patterns

- Arrival accident sites tend to be located close to the extended runway centerline.
- Some 40% fall within a narrow strip, approximately 500-feet-wide and extending some 2,000 feet from the runway end.
- Over 80% of the arrival accident sites are concentrated within just 2,000 feet laterally from the extended runway centerline, but extending outward to approximately 11,000 feet (about 2.0 miles) of the runway end.

Departure Accident Patterns

- Departure accident sites also tend to be clustered near the runway end, but are not as concentrated close to the runway centerline as are the arrival accident sites.
- The most tightly bunched 40% of the points lie within an area 1,500 feet wide, extending approximately 2,000 feet beyond the runway end, but also adjacent to the edges of the runway.
- The 80% contour extends some 6,000 feet beyond the runway end plus along the sides of the runway and spreads laterally approximately 2,000 feet from the runway centerline.

FIGURE B-2
GENERAL AVIATION ACCIDENT DISTRIBUTION CONTOURS (ALL ARRIVALS)

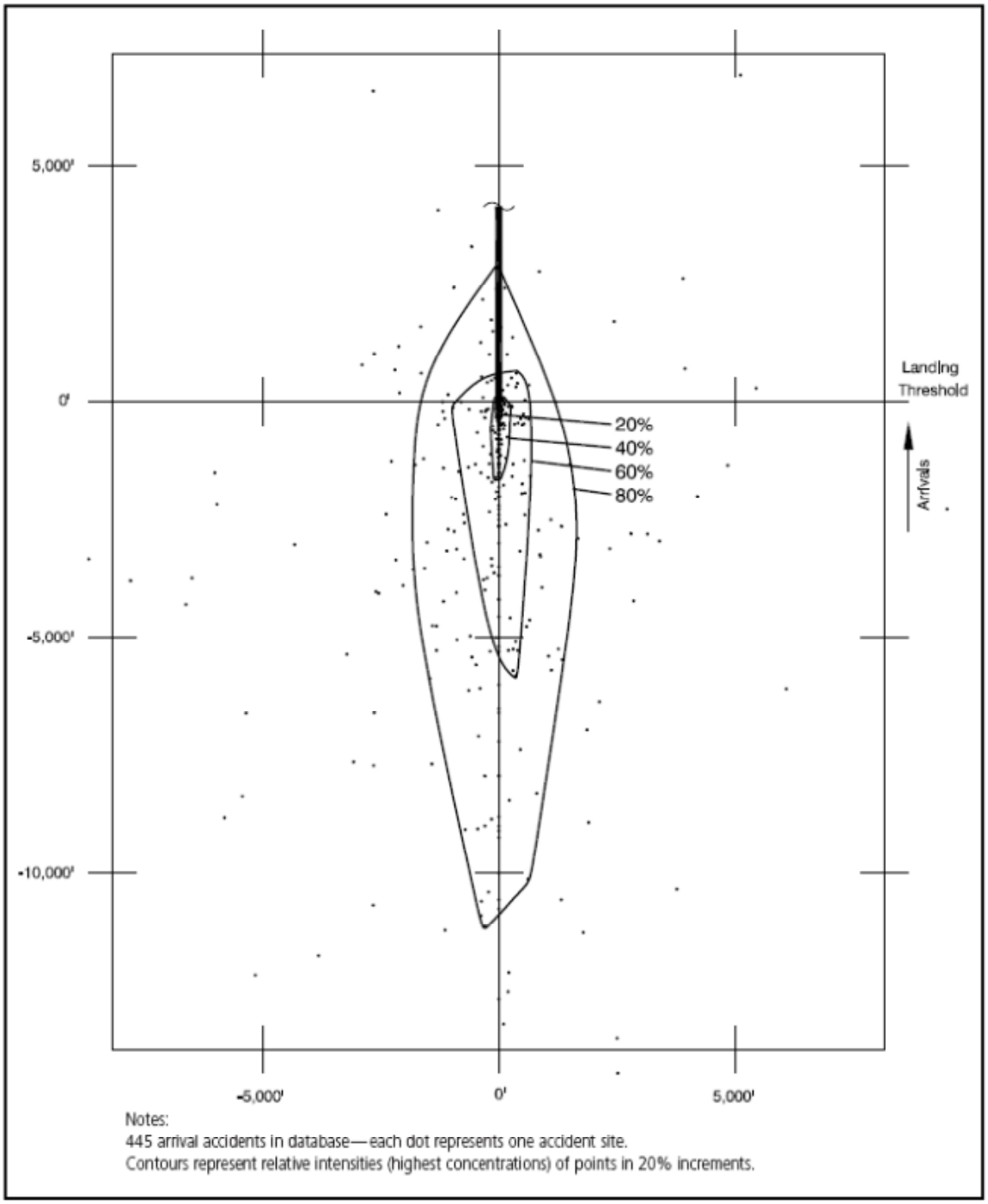

Source: Caltrans, *California Airport Land Use Planning Handbook*, January 2002.

FIGURE B-3
GENERAL AVIATION ACCIDENT DISTRIBUTION CONTOURS (ALL DEPARTURES)

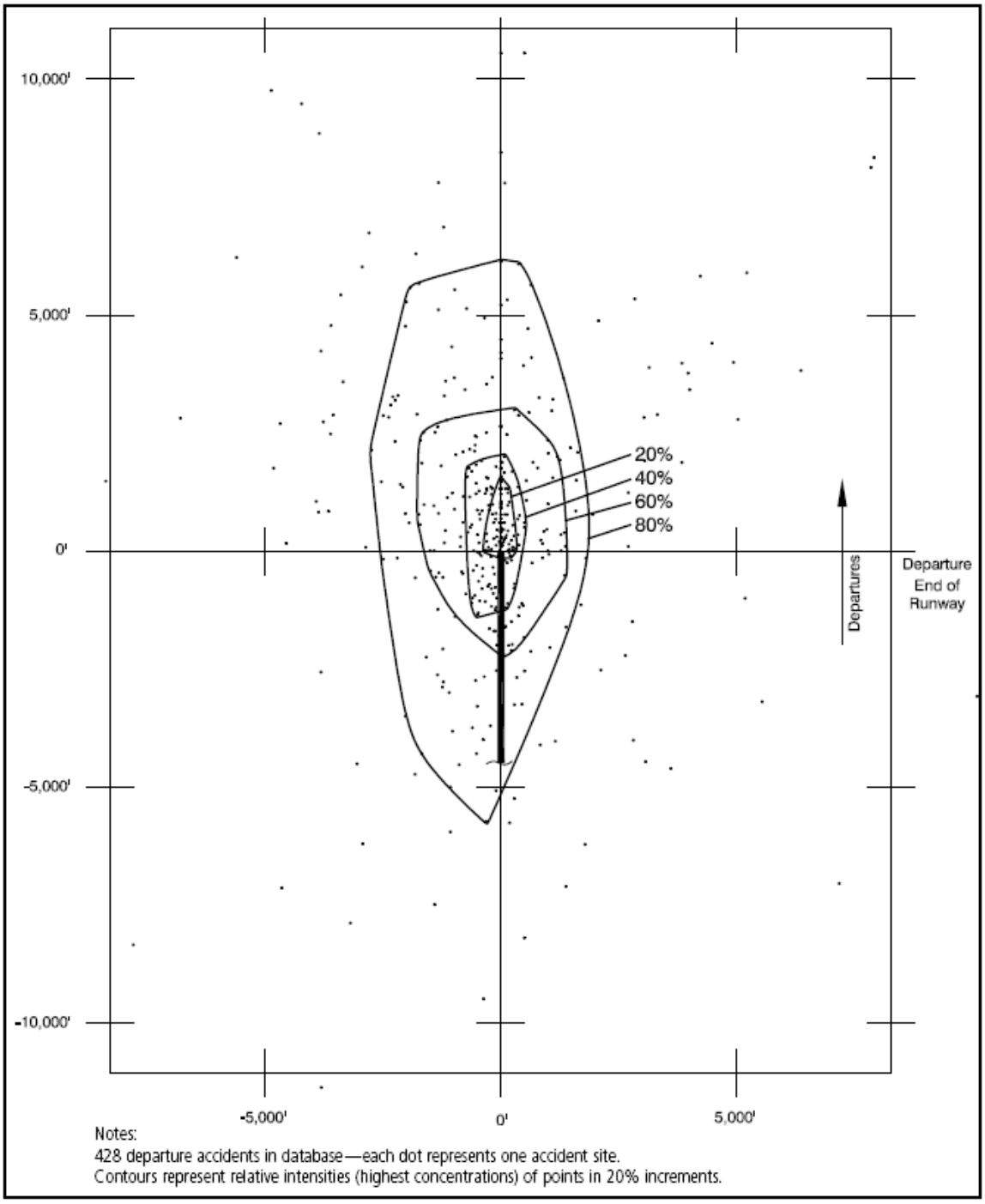

Source: Caltrans, *California Airport Land Use Planning Handbook*, January 2002.

- Two factors account for the substantial number of departure accident sites lateral to the runway.

    1. As defined for the purposes of the database, departing aircraft which crash while attempting to return to the runway are counted as departure accidents unless the aircraft became established in the traffic pattern or on final approach; and

    2. On long runways, aircraft may begin to turn before reaching the far end of the runway.

The next step in taking the accident data provided above and making it applicable to a specific airport is the creation of safety zones. Within safety zones, it is possible for ALUCs to define safety compatibility policies. Safety zones are created to match runways of varying lengths and the approach patterns of a specific airport. The shapes of these zones reflect not just the accident distribution data, but also the ways in which different aircraft operations create various accident risk characteristics close to an airport. For most airports, the *Handbook* suggests creating six safety zones. The locations and typical dimensions of safety zones for both general aviation airports and air carrier airports are depicted in Figures B-4 and 5. In general, the level of risk associated with each safety zone is as follows:

- Zone 1 (Runway Protection Zone) – The risk is greatest in this zone. The dimensions of the RPZ are defined by FAA, which encourages airport ownership of this area and designates specific land use standards when it *is* owned by the airport. Where the land is not owned by the airport, FAA standards serve as recommendations.

- Zone 2 (Inner Approach/Departure Zones) – This zone extends beyond Zone 1, and has a significant degree of risk.

- Zone 3 (Inner Turning Zones) – The risk in this zone is less than in Zones 1 and 2, but greater than 4, 5, and 6. This area encompasses locations where aircraft typically turn at low altitudes while approaching or departing the runway.

- Zone 4 (Outer Approach/Departure Zones) – This zone extends along the runway centerline beyond Zone 2. The degree of significance of this zone depends on whether or not an airport has a straight-in instrument approach procedure.

- Zone 5 (Sideline Zone) – This zone lies adjacent to the runway, and is usually located on airport property. The risk associated with this area is similar to Zone 4.

- Zone 6 (Traffic Pattern Zone) – This zone contains the aircraft traffic pattern. While a high percentage of accidents occur in this zone, the size of the zone reduces the risk level as compared to the other zones.

FIGURE B-4
SAFETY COMPATIBILITY ZONES FOR GENERAL AVIATION RUNWAYS

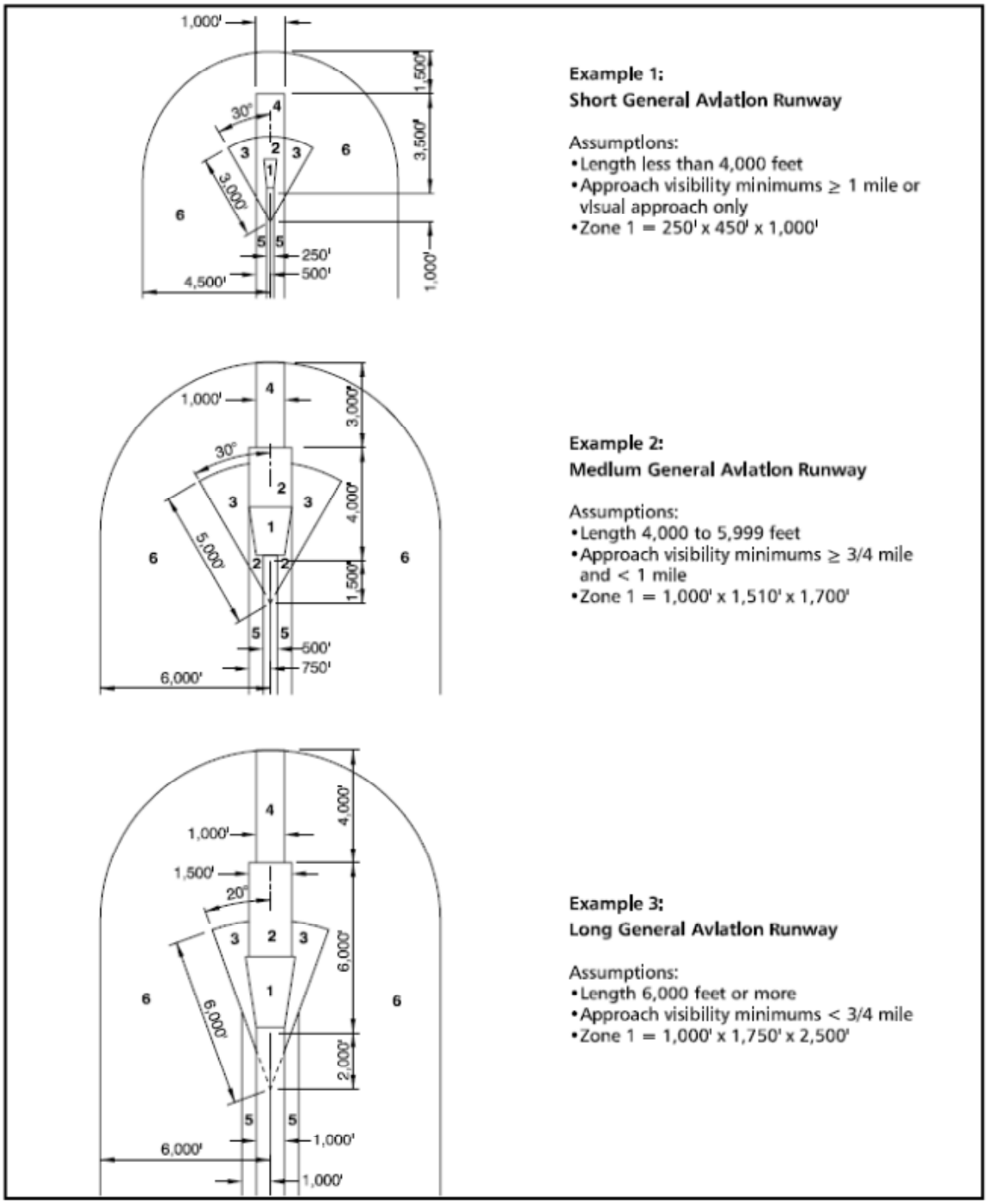

Source: Caltrans, *California Airport Land Use Planning Handbook*, January 2002.

FIGURE B-4 (CONT.)
SAFETY COMPATIBILITY ZONE EXAMPLES FOR GENERAL AVIATION RUNWAYS

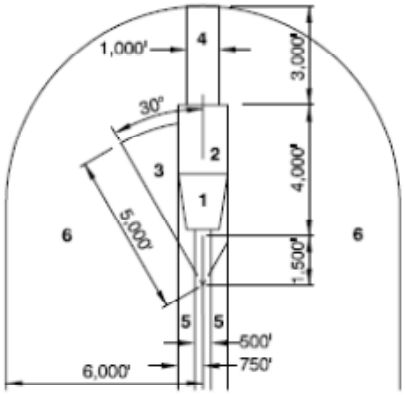

Example 4:
General Aviation Runway with Single-Sided Traffic Pattern

Assumptions:
- No traffic pattern on right
- Length 4,000 to 5,999 feet
- Approach visibility minimums ≥ 3/4 mile and < 1 mile
- Zone 1 = 1,000' x 1,510' x 1,700'

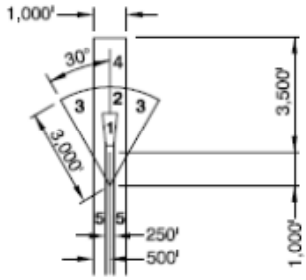

Example 5:
Low-Activity General Aviation Runway

Assumptions:
- Less than 2,000 takeoffs and landings per year at individual runway end.
- Length less than 4,000 feet
- Approach visibility minimums ≥ 1 mile or visual approach only
- Zone 1 = 250' x 450' x 1,000'

Legend

1. Runway Protection Zone
2. Inner Approach/Departure Zone
3. Inner Turning Zone
4. Outer Approach/Departure Zone
5. Sideline Zone
6. Traffic Pattern Zone

Notes:

- RPZ (Zone 1) size in each example is as indicated by FAA criteria for the approach type assumed. Adjustment may be necessary if the approach type differs.
- See Table 9A for factors to consider regarding other possible adjustments to these zones to reflect characteristics of a specific airport runway.
- See Tables 9B and 9C for guidance on compatibility criteria applicable with each zone.

These examples are intended to provide general guidance for establishment of airport safety compatibility zones. They do not represent California Department of Transportation standards or policy.

Source: Caltrans, *California Airport Land Use Planning Handbook*, January 2002.

FIGURE B-5
LARGE AIR CARRIER AND MILITARY RUNWAYS

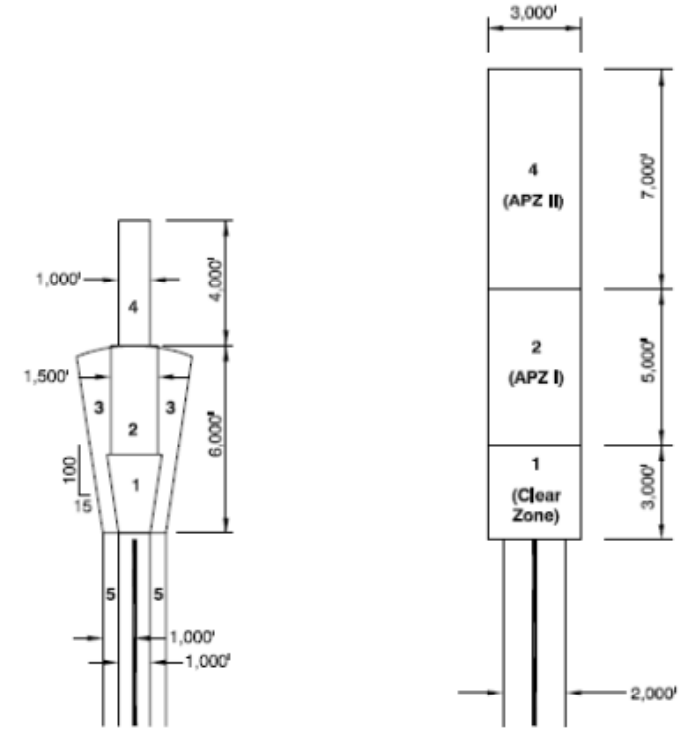

Large Air Carrier Runway

Assumptions:
- Minimal light-aircraft general aviation activity
- Predominately straight-in and straight-out flight routes
- Approach visibility minimums < 3/4 mile
- Zone 1 = 1,000' x 1,750' x 2,500'

Military Runway for Large Aircraft

Assumptions:
- Military airport
- Predominately straight-in and straight-out flight routes (must modify for turning routes and traffic pattern activity)

Legend

1. Runway Protection Zone (Clear Zone)
2. Inner Approach/Departure Zone (Accident Potential Zone I)
3. Inner Turning Zone
4. Outer Approach/Departure Zone (Accident Potential Zone II)
5. Sideline Zone

Notes:

- RPZ (Zone 1) size in the large air carrier runway example is as indicated by FAA criteria for the approach type assumed. Adjustment may be necessary if the approach type differs.
- See Table 9A for factors to consider regarding other possible adjustments to these zones to reflect characteristics of a specific airport runway.
- See Tables 9B and 9C for guidance on compatibility criteria applicable with each zone.

These examples are intended to provide general guidance for establishment of airport safety compatibility zones. They do not represent California Department of Transportation standards or policy.

Source: Caltrans, *California Airport Land Use Planning Handbook*, January 2002.

Compatibility Strategies

Safety compatibility strategies focus on the *consequences* component of risk assessment. Essentially, the question that any ALUC or local jurisdiction should ask when making land use decisions in an airport AIA is: what land use planning measure can be taken to reduce the severity of an aircraft accident if one occurs in a particular location near an airport? Although there is a significant overlap, specific strategies must consider both components of the safety compatibility objective: protecting people and property on the ground; and enhancing safety for aircraft occupants. In each case, the primary strategy is to limit the intensity of use (the number of people concentrated on the site) in locations most susceptible to an off-airport aircraft accident. This is accomplished in several ways:

- *Density and Intensity Limitations*: Establishment of criteria limiting the maximum number of dwellings or people in areas close to the airport is the most direct method of reducing the potential severity of an aircraft accident.

- *Open Land Requirements*: Creation of requirements for open land near an airport addresses the objective of enhancing safety for the occupants of an aircraft forced to make an emergency landing away from a runway.

- *Highly Risk-Sensitive Uses*: Certain critical types of land uses – particularly schools, hospitals, and other uses in which the mobility of occupants is effectively limited – should be avoided in the vicinity of an airport regardless of the number of people involved.

Basis of Setting Criteria

Setting safety compatibility criteria presents the fundamental question of what is safe, or rather, what is an *acceptable* risk? In one respect, it may seem ideal to reduce risks to a minimum by prohibiting most types of land use development from areas near airports. However, there are usually costs associated with such high degree of restrictiveness. In practice, safety criteria are set on a progressive scale with the greatest restrictions established in locations with the greatest potential for aircraft accidents. The following resources can and should be utilized in order to develop safety criteria:

- *Established Guidance*: Little established guidance is available to ALUCs regarding how restrictive to make safety criteria for various parts of an airport's environs. Unlike noise, there are no formal federal or state laws or regulations which set safety criteria for airport area land uses for civilian airport except within runway protection zones (and with regard to airspace obstructions as described separately under *airspace protection*). FAA safety criteria primarily are focused on the runway and its immediate environment. Runway protection zones (also known as "clear areas"), were originally established mostly for the purpose of protecting the occupants of aircraft which overrun or land short of a runway.

Now, they are defined by FAA as intended to enhance the protection of people and property on the ground.

- *New Research*: To provide a better foundation for establishment of safety criteria in other portions of the airport environs, extensive research into the distribution of general aviation accident locations was conducted in conjunction with the 1993 edition of the *Handbook* and expanded as an initial step in preparation of the present edition. For this reason, the *Handbook* serves as the primary guide for the development of safety compatibility criteria. Although this document is not regulatory by nature, state law requires ALUCs to "be guided by" the information provided in the *Handbook*.

Airspace Protection

Relatively few aircraft accidents are caused by land use conditions which are hazards to flight. The potential exists, however, and protecting against it is essential to airport land use safety compatibility.

Compatibility Objective

Because airspace protection is in effect a safety factor, its object can likewise be thought of in terms of risk. Specifically, the objective is to avoid development of land use conditions which, by posing hazards to flight, can increase the risk of an accident occurring. The particular hazards of concern are:

- Airspace obstructions;
- Wildlife hazards, particularly bird strikes; and
- Land use characteristics which pose other potential hazards to flight by creating visual, unseen, or electronic interference with air navigation.

Measurement

The measurement of requirements for airspace protection around an airport is a function of several variables including: the dimensions and layout of the runway system; the type of operating procedures established for the airport; and, indirectly, the performance capabilities of aircraft operated at the airport.

- *Airspace Obstructions*: Whether a particular object constitutes an airspace obstruction depends upon the height of the object relative to the runway elevation and its proximity to the airport. The acceptable height of objects near an airport is most commonly determined by application of standards set forth in Federal Aviation Regulation Part 77: *Objects Affecting Navigable Airspace*. These regulations establish a three-dimensional space in the air above an airport. Any object which penetrates this volume of airspace is considered to be an obstruction and may affect the aeronautical use of the airspace.

- *Wildlife and Other Hazards to Flight*: The significance of other potential hazards to flight is principally measured in terms of a hazard's specific characteristics and its distance from the airport and/ or its normal traffic patterns.

Compatibility Strategies

Compatibility strategies for the protection of airport airspace are relatively simple and are directly associated with these types of hazards:

- *Airspace Obstructions*: Buildings, antennas, other types of structures, and trees should be limited in height so as not to pose a potential hazard to flight.

- *Wildlife and Other Hazards to Flight*: Land uses which may create other types of hazards to flight near an airport should be avoided or modified so as not to include the offending characteristic. This could include, but would not be limited to land uses which create habitat for wildlife potentially hazardous to aircraft operations, industrial uses which create smoke, steam, or thermal plumes, and utility uses like electrical substations which could cause electrical interference.

Basis for Setting Criteria

The criteria for determining airspace obstructions and other hazards to flight have been long-established in FAR Part 77 and other FAA regulations and guidelines. Also, State of California regulation of obstructions under the State Aeronautics Act (Public Utilities Code, Section 21659) is based on FAR Part 77 criteria. (For further information regarding FAR Part 77, please see Appendix C.)

Overflight

Experience at many airports has shown that noise-related concerns do not stop at the boundary of the outermost mapped CNEL contour. Many people are sensitive to the frequent presence of aircraft overhead even at low noise levels. These reactions can be most accurately described in the form of annoyance.

At many airports, particularly air carrier airports, complaints often come from locations beyond any of the defined noise contours. Indeed, heavily used flight corridors to and from metropolitan areas are known to generate noise complaints 50 miles or more from the associated airport. The basis for such complaints may be a desire and expectation that outside noise sources not be intrusive – or, in some circumstances, even distinctly audible – above the quiet, natural background noise level. Elsewhere, especially in locations beneath the traffic patterns of general aviation airports, a fear factor also contributes to some individuals' sensitivity to aircraft overflights.

While these impacts may be important community concerns, the question of importance here is whether any land use planning actions can be taken to avoid or mitigate the impacts or otherwise address the concerns. Commonly, when overflight impacts are under discussion in a community, the focus is on modification of the flight routes. Indeed, some might argue that overflight impacts should be addressed solely through the aviation side of the equation – not only flight route changes, but other modifications to where, when, and how aircraft are operated.

ALUCs are particularly limited in their ability to deal with overflight concerns. For one, they have no authority over aircraft operations. The most they can do to bring about changes is to make requests or recommendations. Even with regard to land use, the authority of ALUCs extends only to proposed new development.

Compatibility Objective

In an idealistic sense, the compatibility objective with respect to overflight is the same as for noise: avoid land use development which can lead to annoyance and complaints. However, given the extensive geographic area over which the impacts may occur, this objective is unrealistic except when relatively close to the airport. A more realistic objective therefore is to promote conditions under which annoyance will be minimized.

Measurement

Determining where to draw boundaries around areas of potentially significant overflight noise exposure is difficult because these locations extend beyond the well-defined CNEL contours which indicate areas of high noise exposure. CNEL contours are not very precise as low noise levels, especially where aircraft flight tracks are widely divergent. The general locations over which aircraft regularly fly as they approach and depart an airport is thus a better indicator of overflight annoyance concerns. For general aviation airports, such locations include areas beneath the standard airport traffic patterns, the portions of the pattern entry and departure routes flown at normal traffic pattern altitude, and perhaps additional places which experience a high concentration of overflights. Also, at all types of airports, common IFR arrival and departure routes can produce overflight concerns, sometimes many miles from the airport.

Compatibility Strategies

As noted above, the ideal land use compatibility strategy with respect to overflight annoyance is to avoid development of residential and other noise-sensitive uses in the affected locations. To the extent that this approach is not practical, three different (but not mutually exclusive) strategies are apparent.

One strategy is to help people with above-average sensitivity to aircraft overflights – people who are highly annoyed by overflights – to avoid living in locations where frequent overflights occur. This strategy involves making people more aware of an airport's proximity and its current and potential aircraft noise impacts on the community before the move to the area. This can be

accomplished through buyer awareness measures such as dedication of avigation or overflight easements, recorded deed notices, and/ or real estate disclosure statements. In new residential developments, posting of signs in the real estate sales office and/ or at key locations in the subdivision itself can serve as additional means of alerting the initial purchasers about the impacts.

A second strategy is to minimize annoyance by reducing the intrusiveness of aircraft noise above normal background noise levels. Because ALUCs and local jurisdictions have no way of regulating aircraft noise levels, the other option is to promote types of residential land uses which tend to mask the intrusive noise. Particularly undesirable are “ranchette” style residential areas consisting of large (about an acre on average) lots. Such developments are dense enough to expose many people to overflight noise, yet sufficiently rural in character that background noise levels are likely to be low.

Finally, for highly noise-sensitive uses, acoustical treatment of the structures, together with dedication of an avigation easement, may be appropriate.

Basis for Setting Criteria

In California, the most definitive guidance on the location of overflight impacts or the appropriate associated action taken in response to an impact comes from a state law which went into effect January 2004. California statutes (Business and Professional Code Section 11010 and Civil Code Sections 1103 and 1353) now require most residential real estate transactions, including all involving subdivisions, to include disclosure of the property’s proximity to a nearby airport. The area encompassed by the disclosure requirement is two miles from the airport, or the AIA as established by the ALUC.

APPENDIX C

FAA Airspace Protection Guidance

Part 77 — Objects Affecting Navigable Airspace

Subpart A General

77.1 Scope.
77.2 Definition of terms.
77.3 Standards.
77.5 Kinds of objects affected.

Subpart B Notice of Construction or Alteration

77.11 Scope.
77.13 Construction or alteration requiring notice.
77.15 Construction or alteration not requiring notice.
77.17 Form and time of notice.
77.19 Acknowledgment of notice.

Subpart C Obstruction Standards

77.21 Scope.
77.23 Standards for determining obstructions.
77.25 Civil airport imaginary surfaces.
77.27 [Reserved]
77.28 Military airport imaginary surfaces.
77.29 Airport imaginary surfaces for heliports.

Subpart D Aeronautical Studies of Effect of Proposed Construction on Navigable Airspace

77.31 Scope.
77.33 Initiation of studies.
77.35 Aeronautical studies.
77.37 Discretionary review.
77.39 Effective period of determination of no hazard.

Subpart E Rules of Practice for Hearings under Subpart D

77.41 Scope.
77.43 Nature of hearing.
77.45 Presiding officer.
77.47 Legal officer.
77.49 Notice of hearing.
77.51 Parties to the hearing.
77.53 Prehearing conference.
77.55 Examination of witnesses.
77.57 Evidence.
77.59 Subpoenas of witnesses and exhibits.
77.61 Revision of construction or alteration proposal.
77.63 Record of hearing.
77.65 Recommendations by parties.
77.67 Final decision of the Administrator.
77.69 Limitations on appearance and representation.

Subpart F Establishment of Antenna Farm Areas

77.71 Scope.
77.73 General provisions.
77.75 Establishment of antenna farm areas.

Authority: 49 U.S.C. 106(g), 40103, 40113-40114, 44502, 44701, 44718, 46101-46102, 46104.
Source: Docket No. 1882, 30 FR 1839, Feb. 10, 1965, unless otherwise noted.

Subpart A — General

Sec. 77.1 Scope.

This part:

(a) Establishes standards for determining obstructions in navigable airspace;

(b) Sets forth the requirements for notice to the Administrator of certain proposed construction or alteration;

(c) Provides for aeronautical studies of obstructions to air navigation, to determine their effect on the safe and efficient use of airspace;

(d) Provides for public hearings on the hazardous effect of proposed construction or alteration on air navigation; and

(e) Provides for establishing antenna farm areas.

Sec. 77.2 Definition of Terms.

For the purpose of this part:

"Airport available for public use" means an airport that is open to the general public with or without a prior request to use the airport.

"A seaplane base" is considered to be an airport only if its sea lanes are outlined by visual markers.

"Nonprecision instrument runway" means a runway having an existing instrument approach procedure utilizing air navigation facilities with only horizontal guidance, or area type navigation equipment, for which a straight- in nonprecision instrument approach procedure has been approved, or planned, and for which no precision approach facilities are planned, or indicated on an FAA planning document or military service military airport planning document.

"Precision instrument runway" means a runway having an existing instrument approach procedure utilizing an Instrument Landing System (ILS), or a Precision Approach Radar (PAR). It also means a runway for which a precision approach system is planned and is so indicated by an FAA approved airport layout plan; a military service approved military airport layout plan; any other FAA planning document, or military service military airport planning document.

"Utility runway" means a runway that is constructed for and intended to be used by propeller driven aircraft of 12,500 pounds maximum gross weight and less.

"Visual runway" means a runway intended solely for the operation of aircraft using visual approach procedures, with no straight-in instrument approach procedure and no instrument designation indicated on an FAA approved airport layout plan, a military service approved military airport layout plan, or by any planning document submitted to the FAA by competent authority.

[Amdt. 77-5, 33 FR 5256, Apr. 2, 1968, as amended by Amdt. 77-9, 36 FR 5969, Apr. 1, 1971]

Sec. 77.3 Standards.

(a) The standards established in this part for determining obstructions to air navigation are used by the Administrator in:

(1) Administering the Federal-aid Airport Program and the Surplus Airport Program;

(2) Transferring property of the United States under section 16 of the Federal Airport Act;

(3) Developing technical standards and guidance in the design and construction of airports; and

(4) Imposing requirements for public notice of the construction or alteration of any structure where notice will promote air safety.

(b) The standards used by the Administrator in the establishment of flight procedures and aircraft operational limitations are not set forth in this part but are contained in other publications of the Administrator.

[Doc. No. 1882, 30 FR 1839, Feb. 10, 1965, as amended by Amdt. 77-9, 36 FR 5970, Apr. 1, 1971]

Sec. 77.5 Kinds of Objects Affected.

This part applies to:

(a) Any object of natural growth, terrain, or permanent or temporary construction or alteration, including equipment or materials used therein, and apparatus of a permanent or temporary character; and

(b) Alteration of any permanent or temporary existing structure by a change in its height (including appurtenances), or lateral dimensions, including equipment or materials used therein.

Subpart B — Notice of Construction or Alteration

Sec. 77.11 Scope.

(a) This subpart requires each person proposing any kind of construction or alteration described in Sec. 77.13(a) to give adequate notice to the Administrator. It specifies the locations and dimensions of the construction or alteration for which notice is required and prescribes the form and manner of the notice. It also requires supplemental notices 48 hours before the start and upon the completion of certain construction or alteration that was the subject of a notice under Sec. 77.13(a).

(b) Notices received under this subpart provide a basis for:

(1) Evaluating the effect of the construction or alteration on operational procedures and proposed operational procedures;

(2) Determinations of the possible hazardous effect of the proposed construction or alteration on air navigation;

(3) Recommendations for identifying the construction or alteration in accordance with the current Federal Aviation Administration Advisory Circular AC 70/7460-1 entitled "Obstruction Marking and Lighting," which is available without charge from the Department of Transportation, Distribution Unit, TAD 484.3, Washington, D.C. 20590.

(4) Determining other appropriate measures to be applied for continued safety of air navigation; and

(5) Charting and other notification to airmen of the construction or alteration.

(Sec. 6, 80 Stat. 937, 49 U.S.C. 1655
[Doc. No. 1882, 30 FR 1839, Feb. 10, 1965, as amended by Amdt. 77-8, 33 FR 18614, Dec. 17, 1968; Amdt. 77-10, 37 FR 4705, Mar. 4, 1972]

Sec. 77.13 Construction or Alteration Requiring Notice.

(a) Except as provided in Sec. 77.15, each sponsor who proposes any of the following construction or alteration shall notify the Administrator in the form and manner prescribed in Sec. 77.17:

(1) Any construction or alteration of more than 200 feet in height above the ground level at its site.

(2) Any construction or alteration of greater height than an imaginary surface extending outward and upward at one of the following slopes:

(i) 100 to 1 for a horizontal distance of 20,000 feet from the nearest point of the nearest runway of each airport specified in paragraph (a)(5) of this section with at least one runway more than 3,200 feet in actual length, excluding heliports.

(ii) 50 to 1 for a horizontal distance of 10,000 feet from the nearest point of the nearest runway of each airport specified in paragraph (a)(5) of this section with its longest runway no more than 3,200 feet in actual length, excluding heliports.

(iii) 25 to 1 for a horizontal distance of 5,000 feet from the nearest point of the nearest landing and takeoff area of each heliport specified in paragraph (a)(5) of this section.

(3) Any highway, railroad, or other traverse way for mobile objects, of a height which, if adjusted upward 17 feet for an Interstate Highway that is part of the National System of Military and Interstate Highways where overcrossings are designed for a minimum of 17 feet vertical distance, 15 feet for any other public roadway, 10 feet or the height of the highest mobile object that would normally traverse the road, whichever is greater, for a private road, 23 feet for a railroad, and for a waterway or any other traverse way not previously mentioned, an amount equal to the height of the highest mobile object that would normally traverse it, would exceed a standard of paragraph (a) (1) or (2) of this section.

(4) When requested by the FAA, any construction or alteration that would be in an instrument approach area (defined in the FAA standards governing instrument approach procedures) and available information indicates it might exceed a standard of Subpart C of this part.

(5) Any construction or alteration on any of the following airports (including heliports):

(i) An airport that is available for public use and is listed in the Airport Directory of the current Airman's Information Manual or in either the Alaska or Pacific Airman's Guide and Chart Supplement.

(ii) An airport under construction, that is the subject of a notice or proposal on file with the Federal Aviation Administration, and, except for military airports, it is clearly indicated that that airport will be available for public use.

(iii) An airport that is operated by an armed force of the United States.

(b) Each sponsor who proposes construction or alteration that is the subject of a notice under paragraph (a) of this section and is advised by an FAA regional office that a supplemental notice is required shall submit that notice on a prescribed form to be received by the FAA regional office at least 48 hours before the start of the construction or alteration.

(c) Each sponsor who undertakes construction or alteration that is the subject of a notice under paragraph (a) of this section shall, within 5 days after that construction or alteration reaches its greatest height, submit a supplemental notice on a prescribed form to the FAA regional office having jurisdiction over the region involved, if—

(1) The construction or alteration is more than 200 feet above the surface level of its site; or

(2) An FAA regional office advises him that submission of the form is required.

[Amdt. 77-5, 33 FR 5256, Apr. 2, 1968, as amended by Amdt. 77-9, 36 FR 5970, Apr. 1, 1971; Amdt. 77-10, 37 FR 4705, Mar. 4, 1972]

Sec. 77.15 Construction or Alteration Not Requiring Notice.

No person is required to notify the Administrator for any of the following construction or alteration:

(a) Any object that would be shielded by existing structures of a permanent and substantial character or by natural terrain or topographic features of equal or greater height, and would be located in the congested area of a city, town, or settlement where it is evident beyond all reasonable doubt that the structure so shielded will not adversely affect safety in air navigation.

(b) Any antenna structure of 20 feet or less in height except one that would increase the height of another antenna structure.

(c) Any air navigation facility, airport visual approach or landing aid, aircraft arresting device, or meteorological device, of a type approved by the Administrator, or an appropriate military service on military airports, the location and height of which is fixed by its functional purpose.

(d) Any construction or alteration for which notice is required by any other FAA regulation.

[Doc. No. 1882, 30 FR 1839, Feb. 10, 1965, as amended by Amdt. 77-5, 33 FR 5257, Apr. 2, 1968; Amdt. 77-9, 36 FR 5970, Apr. 1, 1971]

Sec. 77.17 Form and Time of Notice.

(a) Each person who is required to notify the Administrator under Sec. 77.13(a) shall send one executed form set (four copies) of FAA Form 7460-1, Notice of Proposed Construction or Alteration, to the Manager, Air Traffic Division, FAA Regional Office having jurisdiction over the area within which the construction or alteration will be located. Copies of FAA Form 7460-1 may be obtained from the headquarters of the Federal Aviation Administration and the regional offices.

(b) The notice required under Sec. 77.13(a) (1) through (4) must be submitted at least 30 days before the earlier of the following dates:

(1) The date the proposed construction or alteration is to begin.

(2) The date an application for a construction permit is to be filed. However, a notice relating to proposed construction or alteration that is subject to the licensing requirements of the Federal Communications Act may be sent to FAA at the same time the application for construction is filed with the Federal Communications Commission, or at any time before that filing.

(c) A proposed structure or an alteration to an existing structure that exceeds 2,000 feet in height above the ground will be presumed to be a hazard to air navigation and to result in an inefficient utilization of airspace and the applicant has the burden of overcoming that presumption. Each notice submitted under the pertinent provisions of this Part 77 proposing a structure in excess of 2,000 feet above ground, or an alteration that will make an existing structure exceed that height, must contain a detailed showing, directed to meeting this

burden. Only in exceptional cases, where the FAA concludes that a clear and compelling showing has been made that it would not result in an inefficient utilization of the airspace and would not result in a hazard to air navigation, will a determination of no hazard be issued.

(d) In the case of an emergency involving essential public services, public health, or public safety that requires immediate construction or alteration, the 30-day requirement in paragraph (b) of this section does not apply and the notice may be sent by telephone, telegraph, or other expeditious means, with an executed FAA Form 7460-1 submitted within 5 days thereafter. Outside normal business hours, emergency notices by telephone or telegraph may be submitted to the nearest FAA Flight Service Station.

(e) Each person who is required to notify the Administrator by paragraph (b) or (c) of Sec. 77.13, or both, shall send an executed copy of FAA Form 117-1, Notice of Progress of Construction or Alteration, to the Manager, Air Traffic Division, FAA Regional Office having jurisdiction over the area involved.

(Sec. 6, 80 Stat. 937, 49 U.S.C. 1655
[Doc. No. 1882, 30 FR 1839, Feb. 10, 1965, as amended by Amdt. 77-2, 31 FR 9449, July 12, 1966; Amdt. 77-8, 33 FR 18614, Dec. 17, 1968; Amdt. 77-10, 37 FR 4705, Mar. 4, 1972; Amdt. 77-11, 54 FR 39292, Sept. 25, 1989]

Sec. 77.19 Acknowledgment of Notice.

(a) The FAA acknowledges in writing the receipt of each notice submitted under Sec. 77.13(a).

(b) If the construction or alteration proposed in a notice is one for which lighting or marking standards are prescribed in the FAA Advisory Circular AC 70/7460-1, entitled "Obstruction Marking and Lighting," the acknowledgment contains a statement to that effect and information on how the structure should be marked and lighted in accordance with the manual.

(c) The acknowledgment states that an aeronautical study of the proposed construction or alteration has resulted in a determination that the construction or alteration:

(1) Would not exceed any standard of Subpart C and would not be a hazard to air navigation;

(2) Would exceed a standard of Subpart C but would not be a hazard to air navigation; or

(3) Would exceed a standard of Subpart C and further aeronautical study is necessary to determine whether it would be a hazard to air navigation, that the sponsor may request within 30 days that further study, and that, pending completion of any further study, it is presumed the construction or alteration would be a hazard to air navigation.

[Doc. No. 1882, 30 FR 1839, Feb. 10, 1965, as amended by Amdt. 77-4, 32 FR 12997, Sept. 13, 1967; Amdt. 77-5, 33 FR 5257, Apr. 2, 1968

Subpart C — Obstruction Standards

Sec. 77.21 Scope.

(a) This subpart establishes standards for determining obstructions to air navigation. It applies to existing and proposed manmade objects, objects of natural growth, and terrain. The standards apply to the use of navigable airspace by aircraft and to existing air navigation facilities, such as an air navigation aid, airport, Federal airway, instrument approach or departure procedure, or approved off-airway route. Additionally, they apply to a planned facility or use, or a change in an existing facility or use, if a proposal therefore is on file with the Federal Aviation Administration or an appropriate military service on the date the notice required by Sec. 77.13(a) is filed.

(b) At those airports having defined runways with specially prepared hard surfaces, the primary surface for each such runway extends 200 feet beyond each end of the runway. At those airports having defined strips or pathways that are used regularly for the taking off and landing of aircraft and have been designated by appropriate authority as runways, but do not have specially prepared hard surfaces, each end of the primary surface for each such runway shall coincide with the corresponding end of the runway. At those airports, excluding seaplane bases, having a defined landing and takeoff area with no defined pathways for the landing and taking off of aircraft, a determination shall be made as to which portions of the landing and takeoff area are regularly used as landing and takeoff pathways. Those pathways so determined shall be considered runways and an appropriate primary surface as defined in Sec. 77.25(c) will be considered as being longitudinally centered on each runway so determined, and each end of that primary surface shall coincide with the corresponding end of that runway.

(c) The standards in this subpart apply to the effect of construction or alteration proposals upon an airport if, at the time of filing of the notice required by Sec. 77.13(a), that airport is—

(1) Available for public use and is listed in the Airport Directory of the current Airman's Information Manual or in either the Alaska or Pacific Airman's Guide and Chart Supplement; or

(2) A planned or proposed airport or an airport under construction, that is the subject of a notice or proposal on file with the Federal Aviation Administration, and, except for military airports, it is clearly indicated that that airport will be available for public use; or,

(3) An airport that is operated by an armed force of the United States.

[Doc. No. 1882, 30 FR 1839, Feb. 10, 1965, as amended by Amdt. 77-5, 33 FR 5257, Apr. 2, 1968; Amdt. 77-9, 36 FR 5970, Apr. 1, 1971]

Sec. 77.23 Standards for Determining Obstructions.

(a) An existing object, including a mobile object, is, and a future object would be an obstruction to air navigation if it is of greater height than any of the following heights or surfaces:

(1) A height of 500 feet above ground level at the site of the object.

(2) A height that is 200 feet above ground level or above the established airport elevation, whichever is higher, within 3 nautical miles of the established reference point of an airport, excluding heliports, with its longest runway more than 3,200 feet in actual length, and that height increases in the proportion of 100 feet for each additional nautical mile of distance from the airport up to a maximum of 500 feet.

(3) A height within a terminal obstacle clearance area, including an initial approach segment, a departure area, and a circling approach area, which would result in the vertical distance between any point on the object and an established minimum instrument flight altitude within that area or segment to be less than the required obstacle clearance.

(4) A height within an en route obstacle clearance area, including turn and termination areas, of a Federal airway or approved off-airway route, that would increase the minimum obstacle clearance altitude.

(5) The surface of a takeoff and landing area of an airport or any imaginary surface established under Sec. 77.25, Sec. 77.28, or Sec. 77.29. However, no part of the take-off or landing area itself will be considered an obstruction.

(b) Except for traverse ways on or near an airport with an operative ground traffic control service, furnished by an air traffic control tower or by the airport management and coordinated with the air traffic control service, the standards of paragraph (a) of this section apply to traverse ways used or to be used for the passage of mobile objects only after the heights of these traverse ways are increased by:

(1) Seventeen feet for an Interstate Highway that is part of the National System of Military and Interstate Highways where overcrossings are designed for a minimum of 17 feet vertical distance.

(2) Fifteen feet for any other public roadway.

(3) Ten feet or the height of the highest mobile object that would normally traverse the road, whichever is greater, for a private road.

(4) Twenty-three feet for a railroad, and,

(5) For a waterway or any other traverse way not previously mentioned, an amount equal to the height of the highest mobile object that would normally traverse it.

[Amdt. 77-9, 36 FR 5970, Apr. 1, 1971]

Sec. 77.25 Civil Airport Imaginary Surfaces.

The following civil airport imaginary surfaces are established with relation to the airport and to each runway. The size of each such imaginary surface is based on the category of each runway according to the type of approach available or planned for that runway. The slope and dimensions of the approach surface applied to each end of a runway are determined by the most precise approach existing or planned for that runway end.

(a) Horizontal surface. A horizontal plane 150 feet above the established airport elevation, the perimeter of which is constructed by swinging arcs of specified radii from the center of each end of the primary surface of each runway of each airport and connecting the adjacent arcs by lines tangent to those arcs. The radius of each arc is:

(1) 5,000 feet for all runways designated as utility or visual;

(2) 10,000 feet for all other runways. The radius of the arc specified for each end of a runway will have the same arithmetical value. That value will be the highest determined for either end of the runway. When a 5,000-foot arc is encompassed by tangents connecting two adjacent 10,000-foot arcs, the 5,000-foot arc shall be disregarded on the construction of the perimeter of the horizontal surface.

(b) Conical surface. A surface extending outward and upward from the periphery of the horizontal surface at a slope of 20 to 1 for a horizontal distance of 4,000 feet.

(c) Primary surface. A surface longitudinally centered on a runway. When the runway has a specially prepared hard surface, the primary surface extends 200 feet beyond each end of that runway; but when the runway has no specially prepared hard surface, or planned hard surface, the primary surface ends at each end of that runway. The elevation of any point on the primary surface is the same as the elevation of the nearest point on the runway centerline. The width of a primary surface is:

(1) 250 feet for utility runways having only visual approaches.

(2) 500 feet for utility runways having nonprecision instrument approaches.

(3) For other than utility runways the width is:

(i) 500 feet for visual runways having only visual approaches.

(ii) 500 feet for nonprecision instrument runways having visibility minimums greater than three-fourths statute mile.

(iii) 1,000 feet for a nonprecision instrument runway having a nonprecision instrument approach with visibility minimums as low as three-fourths of a statute mile, and for precision instrument runways. The width of the primary surface of a runway will be that width prescribed in this section for the most precise approach existing or planned for either end of that runway.

(d) Approach surface. A surface longitudinally centered on the extended runway centerline and extending outward and upward from each end of the primary surface. An approach surface is applied to each end of each runway based upon the type of approach available or planned for that runway end.

(1) The inner edge of the approach surface is the same width as the primary surface and it expands uniformly to a width of:

(i) 1,250 feet for that end of a utility runway with only visual approaches;

(ii) 1,500 feet for that end of a runway other than a utility runway with only visual approaches;

(iii) 2,000 feet for that end of a utility runway with a nonprecision instrument approach;

(iv) 3,500 feet for that end of a nonprecision instrument runway other than utility, having visibility minimums greater than three-fourths of a statute mile;

(v) 4,000 feet for that end of a nonprecision instrument runway, other than utility, having a nonprecision instrument approach with visibility minimums as low as three-fourths statute mile; and

(vi) 16,000 feet for precision instrument runways.

(2) The approach surface extends for a horizontal distance of:

(i) 5,000 feet at a slope of 20 to 1 for all utility and visual runways;

(ii) 10,000 feet at a slope of 34 to 1 for all nonprecision instrument runways other than utility; and,

(iii) 10,000 feet at a slope of 50 to 1 with an additional 40,000 feet at a slope of 40 to 1 for all precision instrument runways.

(3) The outer width of an approach surface to an end of a runway will be that width prescribed in this subsection for the most precise approach existing or planned for that runway end.

(e) Transitional surface. These surfaces extend outward and upward at right angles to the runway centerline and the runway centerline extended at a slope of 7 to 1 from the sides of the primary surface and from the sides of the approach surfaces. Transitional surfaces for those portions of the precision approach surface which project through and beyond the limits of the conical surface, extend a distance of 5,000 feet measured horizontally from the edge of the approach surface and at right angles to the runway centerline.

[Amdt. 77-9, 36 FR 5970, Apr. 1, 1971; 36 FR 6741, Apr. 8, 1971]

Sec. 77.27 [Reserved]

Sec. 77.28 Military airport imaginary surfaces.

(a) Related to airport reference points. These surfaces apply to all military airports. For the purposes of this section a military airport is any airport operated by an armed force of the United States.

(1) Inner horizontal surface. A plane is oval in shape at a height of 150 feet above the established airfield elevation. The plane is constructed by scribing an arc with a radius of 7,500 feet about the centerline at the end of each runway and interconnecting these arcs with tangents.

(2) Conical surface. A surface extending from the periphery of the inner horizontal surface outward and upward at a slope of 20 to 1 for a horizontal distance of 7,000 feet to a height of 500 feet above the established airfield elevation.

(3) Outer horizontal surface. A plane, located 500 feet above the established airfield elevation, extending outward from the outer periphery of the conical surface for a horizontal distance of 30,000 feet.

(b) Related to runways. These surfaces apply to all military airports.

(1) Primary surface. A surface located on the ground or water longitudinally centered on each runway with the same length as the runway. The width of the primary surface for runways is 2,000 feet. However, at established bases where substantial construction has taken place in accordance with a previous lateral clearance criteria, the 2,000-foot width may be reduced to the former criteria.

(2) Clear zone surface. A surface located on the ground or water at each end of the primary surface, with a length of 1,000 feet and the same width as the primary surface.

(3) Approach clearance surface. An inclined plane, symmetrical about the runway centerline extended, beginning 200 feet beyond each end of the primary surface at the centerline elevation of the runway end and extending for 50,000 feet. The slope of the approach clearance surface is 50 to 1 along the runway centerline extended until it reaches an elevation of 500 feet above the established airport elevation. It then continues horizontally at this elevation to a point 50,000 feet from the point of beginning. The width of this surface at the runway end is the same as the primary surface, it flares uniformly, and the width at 50,000 is 16,000 feet.

(4) Transitional surfaces. These surfaces connect the primary surfaces, the first 200 feet of the clear zone surfaces, and the approach clearance surfaces to the inner horizontal surface, conical surface, outer horizontal surface or other transitional surfaces. The slope of the transitional surface is 7 to 1 outward and upward at right angles to the runway centerline.

[Doc. No. 1882, 30 FR 1839, Feb. 10, 1965, as amended by Amdt. 77-1, 30 FR 6713, May 18, 1965; Amdt. 77-9, 36 FR 5971, Apr. 1, 1971]

Sec. 77.29 Airport Imaginary Surfaces for Heliports.

(a) Heliport primary surface. The area of the primary surface coincides in size and shape with the designated take-off and landing area of a heliport. This surface is a horizontal plane at the elevation of the established heliport elevation.

(b) Heliport approach surface. The approach surface begins at each end of the heliport primary surface with the same width as the primary surface, and extends outward and upward for a horizontal distance of 4,000 feet where its width is 500 feet. The slope of the approach surface is 8 to 1 for civil heliports and 10 to 1 for military heliports.

(c) Heliport transitional surfaces. These surfaces extend outward and upward from the lateral boundaries of the heliport primary surface and from the approach surfaces at a slope of 2 to 1 for a distance of 250 feet measured horizontally from the centerline of the primary and approach surfaces.

[Doc. No. 1882, 30 FR 1839, Feb. 10, 1965, as amended by Amdt. 77-9, 36 FR 5971, Apr. 1, 1971; 36 FR 6741, Apr. 8, 1971]

Subpart D — Aeronautical Studies of Effect of Proposed Construction on Navigable Airspace

---

Sec. 77.31 Scope.

(a) This subpart applies to the conduct of aeronautical studies of the effect of proposed construction or alteration on the use of air navigation facilities or navigable airspace by aircraft. In the aeronautical studies, present and future IFR and VFR aeronautical operations and procedures are reviewed and any possible changes in those operations and procedures and in the construction proposal that would eliminate or alleviate the conflicting demands are ascertained.

(b) The conclusion of a study made under this subpart is normally a determination as to whether the specific proposal studied would be a hazard to air navigation.

[Doc. No. 1882, 30 FR 1839, Feb. 10, 1965, as amended by Amdt. 77-6, 33 FR 10843, July 31, 1968]

Sec. 77.33 Initiation of Studies.

(a) An aeronautical study is conducted by the FAA:

(1) Upon the request of the sponsor or any construction or alteration for which a notice is submitted under Subpart B of this part, unless that construction or alteration would be located within an antenna farm area established under Subpart F of this part; or

(2) Whenever the FAA determines it appropriate.

[Doc. No. 1882, 30 FR 1839, Feb. 10, 1965, as amended by Amdt. 77-4, 32 FR 12997, Sept. 13, 1967]

Sec. 77.35 Aeronautical Studies.

(a) The Regional Manager, Air Traffic Division of the region in which the proposed construction or alteration would be located, or his designee, conducts the aeronautical study of the effect of the proposal upon the operation of air navigation facilities and the safe and efficient utilization of the navigable airspace. This study may include the physical and electromagnetic radiation effect the proposal may have on the operation of an air navigation facility.

(b) To the extent considered necessary, the Regional Manager, Air Traffic Division or his designee:

(1) Solicits comments from all interested persons;

(2) Explores objections to the proposal and attempts to develop recommendations for adjustment of aviation requirements that would accommodate the proposed construction or alteration;

(3) Examines possible revisions of the proposal that would eliminate the exceeding of the standards in Subpart C of this part; and

(4) Convenes a meeting with all interested persons for the purpose of gathering all facts relevant to the effect of the proposed construction or alteration on the safe and efficient utilization of the navigable airspace.

(c) The Regional Manager, Air Traffic Division or his designee issues a determination as to whether the proposed construction or alteration would be a hazard to air navigation and sends copies to all known interested persons. This determination is final unless a petition for review is granted under Sec. 77.37.

(d) If the sponsor revises his proposal to eliminate exceeding of the standards of Subpart C of this part, or withdraws it, the Regional Manager, Air Traffic Division, or his designee, terminates the study and notifies all known interested persons.

[Doc. No. 1882, 30 FR 1839, Feb. 10, 1965, as amended by Amdt. 77-6, 33 FR 10843, July 31, 1968; Amdt. 77-11, 54 FR 39292, Sept. 25, 1989]

Sec. 77.37 Discretionary Review.

(a) The sponsor of any proposed construction or alteration or any person who stated a substantial aeronautical objection to it in an aeronautical study, or any person who has a substantial aeronautical objection to it but was not given an opportunity to state it, may petition the Administrator, within 30 days after issuance of the determination under Sec. 77.19 or Sec. 77.35 or revision or extension of the determination under Sec. 77.39(c), for a review of the determination, revision, or extension. This paragraph does not apply to any acknowledgment issued under Sec. 77.19(c)(1).

(b) The petition must be in triplicate and contain a full statement of the basis upon which it is made.

(c) The Administrator examines each petition and decides whether a review will be made and, if so, whether it will be:

(1) A review on the basis of written materials, including study of a report by the Regional Manager, Air Traffic Division of the aeronautical study, briefs, and related submissions by any interested party, and other relevant facts, with the Administrator affirming, revising, or reversing the determination issued under Sec. 77.19, Sec. 77.35 or Sec. 77.39(c); or

(2) A review on the basis of a public hearing, conducted in accordance with the procedures prescribed in Subpart E of this part.

[Doc. No. 1882, 30 FR 1839, Feb. 10, 1965, as amended by Amdt. 77-3, 32 FR 6970, May 6, 1967; Amdt. 77-11, 54 FR 39292, Sept. 25, 1989]

Sec. 77.39 Effective Period of Determination of No Hazard.

(a) Unless it is otherwise extended, revised, or terminated, each final determination of no hazard made under this subpart or Subpart B or E of this part expires 18 months after its effective date, regardless of whether the proposed construction or alteration has been started, or on the date the proposed construction or alteration is abandoned, whichever is earlier.

(b) In any case, including a determination to which paragraph (d) of this section applies, where the proposed construction or alteration has not been started during the applicable period by actual structural work, such as the laying of a foundation, but not including excavation, any interested person may, at least 15 days before the date the final determination expires, petition the FAA official who issued the determination to:

(1) Revise the determination based on new facts that change the basis on which it was made; or

(2) Extend its effective period.

(c) The FAA official who issued the determination reviews each petition presented under paragraph (b) of this section, and revises, extends, or affirms the determination as indicated by his findings.

(d) In any case in which a final determination made under this subpart or Subpart B or E of this part relates to proposed construction or alteration that may not be started unless the Federal Communications Commission issues an appropriate construction permit, the effective period of each final determination includes—

(1) The time required to apply to the Commission for a construction permit, but not more than 6 months after the effective date of the determination; and

(2) The time necessary for the Commission to process the application except in a case where the Administrator determines a shorter effective period is required by the circumstances.

(e) If the Commission issues a construction permit, the final determination is effective until the date prescribed for completion of the construction. If the Commission refuses to issue a construction permit, the final determination expires on the date of its refusal.

[Doc. No. 1882, 30 FR 1839, Feb. 10, 1965, as amended by Amdt. 77-5, 33 FR 5257, Apr. 2, 1968]

Subpart E — Rules of Practice for Hearings Under Subpart D

Sec. 77.41 Scope.

This subpart applies to hearings held by the FAA under Titles I, III, and X of the Federal Aviation Act of 1958 (49 U.S.C. Subchapters I, III, and X), on proposed construction or alteration that affects the use of navigable airspace.

Sec. 77.43 Nature of Hearing.

Sections 4, 5, 7, and 8 of the Administrative Procedure Act (5 U.S.C. 1003, 1004, 1006, and 1007) do not apply to hearings held on proposed construction or alteration to determine its effect on the safety of aircraft and the efficient use of navigable airspace because those hearings are fact-finding in nature. As a fact-finding procedure, each hearing is nonadversary and there are no formal pleadings or adverse parties.

Sec. 77.45 Presiding Officer.

(a) If, under Sec. 79.37, the Administrator grants a public hearing on any proposed construction or alteration covered by this part, the Director, Air Traffic Operations Service designates an FAA employee to be the presiding officer at the hearing.

(b) The presiding officer may:

(1) Give notice of the date and location of the hearing and any prehearing conference that may be held;

(2) Administer oaths and affirmations;

(3) Examine witnesses;

(4) Issue subpoenas and take depositions or have them taken;

(5) Obtain, in the form of a public record, all pertinent and relevant facts relating to the subject matter of the hearing;

(6) Rule, with the assistance of the legal officer, upon the admissibility of evidence;

(7) Regulate the course and conduct of the hearing; and

(8) Designate parties to the hearing and revoke those designations.

[Doc. No. 1882, 30 FR 1839, Feb. 10, 1965, as amended by Amdt. 77-11, 54 FR 39292, Sept. 25, 1989]

Sec. 77.47 Legal Officer.

The Chief Counsel designates a member of his staff to serve as legal officer at each hearing under this subpart. The legal officer may examine witnesses and assist and advise the presiding officer on questions of evidence or other legal questions arising during the hearing.

[Doc. No. 1882, 30 FR 1839, Feb. 10, 1965, as amended at 38 FR 26444, Sept. 17, 1973]

Sec. 77.49 Notice of Hearing.

In designating a time and place for a hearing under this subpart the presiding officer considers the needs of the FAA and the convenience of the parties and witnesses. The time and place of each hearing is published in the "Notices" section of the Federal Register before the date of the hearing, unless the notice is impractical or unnecessary.

Sec. 77.51 Parties to the Hearing.

The presiding officer designates the following as parties to the hearing—

(a) The proponent of the proposed construction or alteration.

(b) Those persons whose activities would be substantially affected by the proposed construction or alteration.

Sec. 77.53 Prehearing Conference.

(a) The presiding officer may, in his discretion, hold a prehearing conference with the parties to the hearing and the legal officer before the hearing.

(b) At the direction of the presiding officer, each party to a prehearing conference shall submit a brief written statement of the evidence he intends to provide through his witnesses and by questioning other witnesses at the hearing, and shall provide enough copies of the statement so that the presiding officer may keep three for the FAA and give one to each other party.

(c) At the prehearing conference, the presiding officer reduces and simplifies the subject matter of the hearing so far as possible and advises the parties of the probable order of presenting the evidence.

Sec. 77.55 Examination of Witnesses.

(a) Each witness at a hearing under this subpart shall, after being sworn by the presiding officer, give his testimony under oath.

(b) The party for whom a witness, other than an employee of the FAA, is testifying shall examine that witness. After that examination, other parties to the hearing may examine the witness, in the order fixed by the presiding officer. The presiding officer and the legal officer may then examine the witness. The presiding officer may grant any party an additional opportunity to examine any witness, if that party adequately justifies the additional examination.

(c) The legal officer examines each FAA employee who is a witness, before the other parties examine him. After that examination, the order prescribed in paragraph (b) of this section applies. An FAA employee may testify only as to facts within his personal knowledge and the application of FAA regulations, standards, and policies.

Sec. 77.57 Evidence.

(a) The presiding officer receives all testimony and exhibits that are relevant to the issues of the hearing. So far as possible, each party shall submit enough copies of his exhibits that the presiding officer may keep three copies for the FAA and give one to each other party.

(b) The presiding officer excludes any testimony that is irrelevant, unduly repetitious, or consists of statements made during an aeronautical study in an effort to reconcile or compromise aviation or construction or alteration requirements. A party to the hearing may object to the admission of evidence only on the ground that it is irrelevant.

Sec. 77.59 Subpoenas of Witnesses and Exhibits.

(a) The presiding officer of a hearing may issue subpoenas for any witness or exhibit that he determines may be material and relevant to the issues of the hearing. So far as possible, each party to the hearing shall provide the witnesses and exhibits that he intends to present at the hearing.

(b) If any party to the hearing is unable to provide his necessary witnesses and exhibits, he shall advise the presiding officer far enough in advance that the presiding officer can determine whether he should issue subpoenas for the desired witnesses or exhibits.

Sec. 77.61 Revision of Construction or Alteration Proposal.

(a) The sponsor of any proposed construction or alteration covered by this part may revise his proposal at any time before or during the hearing. If he revises it, the presiding officer decides whether the revision affects the proposal to the extent that he should send it to the Administrator for a redetermination of the need for a hearing.

(b) If the presiding officer decides that it does not need to be resubmitted to the Administrator, he advises the parties of the revised proposal and takes the action necessary to allow all parties to effectively participate in the hearing on the revised proposal. Without limiting his discretion, the presiding officer may recess and reconvene the hearing, or hold another prehearing conference.

Sec. 77.63 Record of Hearing.

(a) Each hearing is recorded verbatim by an official reporter under an FAA contract. The transcript, and all exhibits, become a part of the record of the hearing.

(b) Any person may buy a copy of the transcript of the hearing from the reporter at the price fixed for it.

(c) The presiding officer may allow any party to withdraw an original document if he submits authenticated copies of it.

(d) Any person may buy, from the FAA, photostatic copies of any exhibit by paying the copying costs.

(e) A change in the official transcript of a hearing may be made only if it involves an error of substance. Any recommendation to correct the transcript must be filed with the presiding officer within 5 days after the hearing closes. The presiding officer reviews each request for a correction to the extent he considers appropriate and shall make any revisions that he finds appropriate as a result of that review.

Sec. 77.65 Recommendations by Parties.

Within 20 days after the mailing of the record of hearing by the official reporter, or as otherwise directed by the presiding officer, each party may submit to the presiding officer five copies of his recommendations for a final decision to be made by the Administrator.

Sec. 77.67 Final Decision of the Administrator.

After reviewing the evidence relevant to the questions of fact in a hearing, including the official transcript and the exhibits, the Administrator resolves all these questions, based on the weight of evidence, and makes his determination, stating the basis and reasons for it. He then issues an appropriate order to be served on each of the parties.

Sec. 77.69 Limitations on Appearance and Representation.

(a) A former officer or employee of the FAA may not appear on behalf of, or represent, any party before the FAA in connection with any matter to which this part applies, if he considered or passed on that matter while he was an officer or employee of the FAA.

(b) A person appearing before the FAA on any matter to which this part applies may not, in connection with that appearance, knowingly accept assistance from, or share fees with, any person who is prohibited by paragraph (a) of this section, from appearing himself on that matter.

(c) A former official or employee of the FAA may not, within 6 months after he ceases to be such an officer or employee, appear before the FAA on behalf of, or represent, any party in connection with any proceeding that was pending under this part while he was an officer or employee of the FAA, unless he obtains written consent from an appropriate officer of the FAA, based on a verified showing that he did not personally consider the matter concerned or gain particular knowledge of it while he was an officer or employee of the FAA.

Subpart F — Establishment of Antenna Farm Areas

Sec. 77.71 Scope.

(a) This subpart establishes antenna farm areas in which antenna structures may be grouped to localize their effect on the use of navigable airspace.

(b) It is the policy of the FAA to encourage the use of antenna farms and the single structure-multiple antenna concept for radio and television towers whenever possible. In considering proposals for establishing antenna farm areas, it considers as far as possible the revision of aeronautical procedures and operations to accommodate antenna structures that will fulfill broadcasting requirements.

Sec. 77.73 General Provisions.

(a) An antenna farm area consists of a specified geographical location with established dimensions of area and height, where antenna towers with a common impact on aviation may be grouped. Each such area is established by appropriate rule making action.

(b) Each proposal for an antenna farm area is evaluated on the basis of its effect on the use of navigable airspace. The views of the Federal Communications Commission are requested on the effect that each establishment of an antenna farm area would have on its statutory responsibilities. Any views submitted by it are fully considered before the antenna farm concerned is established. If the Commission advises that the establishment of any proposed antenna farm area would interfere with its statutory responsibility, the proposed area is not established.

(c) The establishment of an antenna farm area is considered whenever it is proposed by:

(1) The FAA;

(2) The Federal Communications Commission;

(3) The sponsor of a proposed antenna tower; or

(4) Any other person having a substantial interest in a proposed antenna tower.

[Doc. No. 1882, 30 FR 1839, Feb. 10, 1965, as amended by Amdt. 77-10, 37 FR 4705, Mar. 4, 1972]

Sec. 77.75 Establishment of Antenna Farm Areas.

The airspace areas described in the following sections of this subpart are established as antenna farm areas.

Note: Sections 77.77 through 77.1100 reserved for descriptions of antenna farm areas.

FIGURE C-1
FAR PART 77 IMAGINARY SURFACES

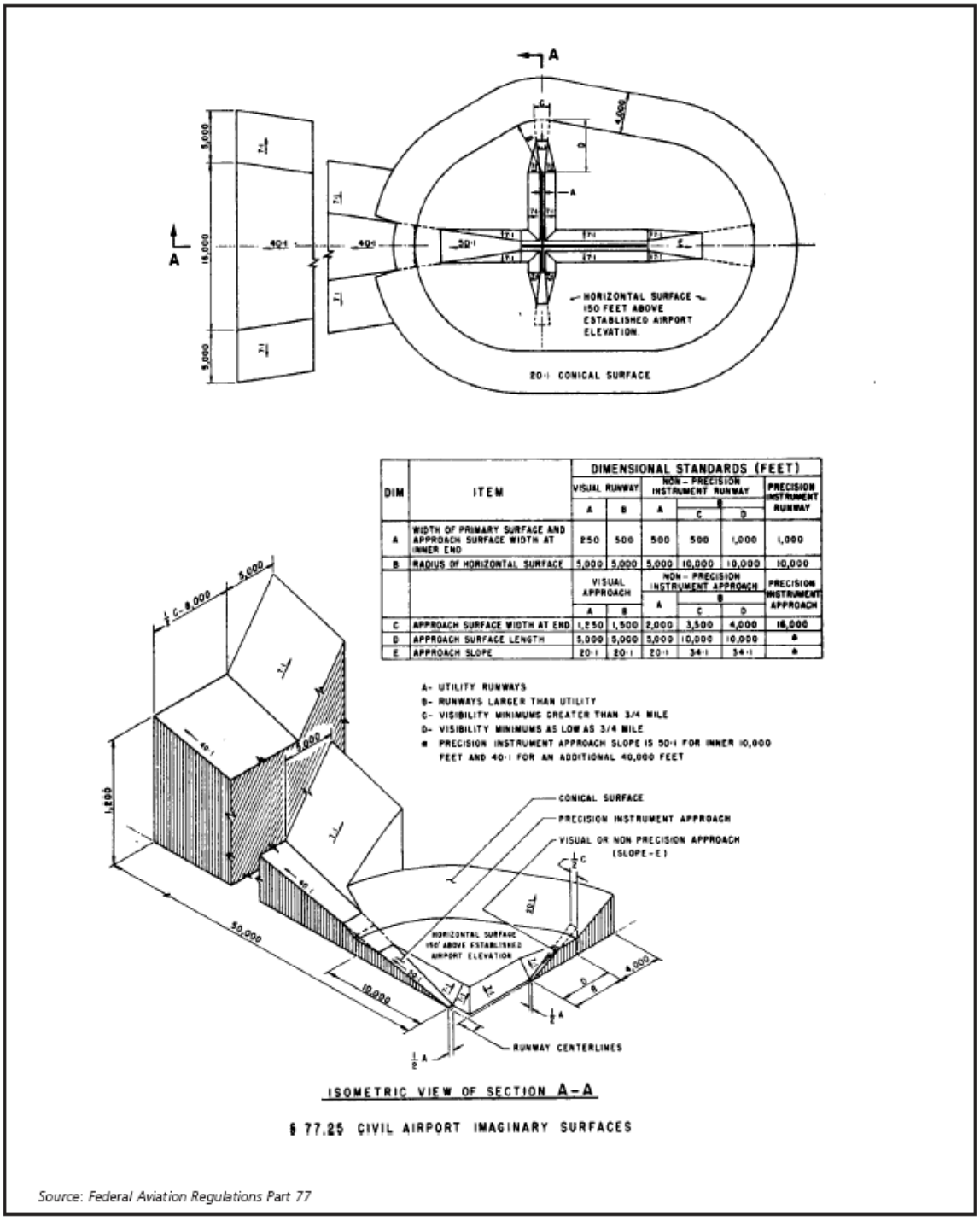

DIM	ITEM	DIMENSIONAL STANDARDS (FEET)					
		VISUAL RUNWAY		NON-PRECISION INSTRUMENT RUNWAY			PRECISION INSTRUMENT RUNWAY
		A	B	A	B C	B D	
A	WIDTH OF PRIMARY SURFACE AND APPROACH SURFACE WIDTH AT INNER END	250	500	500	500	1,000	1,000
B	RADIUS OF HORIZONTAL SURFACE	5,000	5,000	5,000	10,000	10,000	10,000
		VISUAL APPROACH		NON-PRECISION INSTRUMENT APPROACH			PRECISION INSTRUMENT APPROACH
		A	B	A	B C	B D	
C	APPROACH SURFACE WIDTH AT END	1,250	1,500	2,000	3,500	4,000	16,000
D	APPROACH SURFACE LENGTH	5,000	5,000	5,000	10,000	10,000	*
E	APPROACH SLOPE	20:1	20:1	20:1	34:1	34:1	*

Source: Caltrans, *California Airport Land Use Planning Handbook*, January 2002.

FIGURE B-2
NOTIFICATION OF PROPOSED CONSTRUCTION OR ALTERATION (FAA FORM 7460)

Please Type or Print on This Form

Form Approved OMB No. 2120-0001

U.S. Department of Transportation
Federal Aviation Administration

Failure To Provide All Requested Information May Delay Processing of Your Notice

Notice of Proposed Construction or Alteration

FOR FAA USE ONLY
Aeronautical Study Number
- - -

1. Sponsor *(person, company, etc. proposing this action)* :
Attn. of: _____
Name: _____
Address: _____
City: _____ State: _____ Zip: _____
Telephone: _____ Fax: _____

2. Sponsor's Representative *(if other than #1)* :
Attn. of: _____
Name: _____
Address: _____
City: _____ State: _____ Zip: _____
Telephone: _____ Fax: _____

3. Notice of: ☐ New Construction ☐ Alteration ☐ Existing

4. Duration: ☐ Permanent ☐ Temporary (months, days)

5. Work Schedule: Beginning _____ End _____

6. Type: ☐ Antenna Tower ☐ Crane ☐ Building ☐ Power Line
☐ Landfill ☐ Water Tank ☐ Other _____

7. Marking/Painting and/or Lighting Preferred:
☐ Red Lights and Paint ☐ Dual - Red and Medium Intensity White
☐ White - Medium Intensity ☐ Dual - Red and High Intensity White
☐ White - High Intensity ☐ Other _____

8. FCC Antenna Structure Registration Number *(if applicable)*:
_____

9. Latitude: ____° ____' ____. ____"

10. Longitude: ____° ____' ____. ____"

11. Datum: ☐ NAD 83 ☐ NAD 27 ☐ Other _____

12. Nearest: City: _____ State: _____

13. Nearest Public-use (not private-use) or Military Airport or Heliport:
_____

14. Distance from #13. to Structure: _____

15. Direction from #13. to Structure: _____

16. Site Elevation *(AMSL)*: _____ ft.

17. Total Structure Height *(AGL)*: _____ ft.

18. Overall height (#16. + #17.) *(AMSL)*: _____ ft.

19. Previous FAA Aeronautical Study Number (if applicable):
_____ -

20. Description of Location: (Attach a USGS 7.5 minute Quadrangle Map with the precise site marked and any certified survey.)

21. Complete Description of Proposal:

Frequency/Power (kW)	

Notice is required by 14 Code of Federal Regulations, part 77 pursuant to 49 U.S.C., Section 44718. Persons who knowingly and willingly violate the notice requirements of part 77 are subject to a civil penalty of $1,000 per day until the notice is received, pursuant to 49 U.S.C., section 46301 (a).

I hereby certify that all of the above statements made by me are true, complete, and correct to the best of my knowledge. In addition, I agree to mark and/or light the structure in accordance with established marking and lighting standards as necessary.

Date	Typed or Printed name and Title of Person Filing Notice	Signature

Source: Caltrans, *California Airport Land Use Planning Handbook*, January 2002.

This page left intentionally blank.

U.S. Department
of Transportation

Federal Aviation Administration

Advisory Circular

Subject: HAZARDOUS WILDLIFE ATTRACTANTS ON OR NEAR AIRPORTS	**Date:** 8/28/2007	**AC No:** 150/5200-33B
	Initiated by: AAS-300	**Change:**

1. PURPOSE. This Advisory Circular (AC) provides guidance on certain land uses that have the potential to attract hazardous wildlife on or near public-use airports. It also discusses airport development projects (including airport construction, expansion, and renovation) affecting aircraft movement near hazardous wildlife attractants. Appendix 1 provides definitions of terms used in this AC.

2. APPLICABILITY. The Federal Aviation Administration (FAA) recommends that public-use airport operators implement the standards and practices contained in this AC. The holders of Airport Operating Certificates issued under Title 14, Code of Federal Regulations (CFR), Part 139, Certification of Airports, Subpart D (Part 139), may use the standards, practices, and recommendations contained in this AC to comply with the wildlife hazard management requirements of Part 139. Airports that have received Federal grant-in-aid assistance must use these standards. The FAA also recommends the guidance in this AC for land-use planners, operators of non-certificated airports, and developers of projects, facilities, and activities on or near airports.

3. CANCELLATION. This AC cancels AC 150/5200-33A, *Hazardous Wildlife Attractants on or near Airports*, dated July 27, 2004.

4. PRINCIPAL CHANGES. This AC contains the following major changes, which are marked with vertical bars in the margin:

a. Technical changes to paragraph references.

b. Wording on storm water detention ponds.

c. Deleted paragraph 4-3.b, *Additional Coordination.*

5. BACKGROUND. Information about the risks posed to aircraft by certain wildlife species has increased a great deal in recent years. Improved reporting, studies, documentation, and statistics clearly show that aircraft collisions with birds and other wildlife are a serious economic and public safety problem. While many species of wildlife can pose a threat to aircraft safety, they are not equally hazardous. Table 1

ranks the wildlife groups commonly involved in damaging strikes in the United States according to their relative hazard to aircraft. The ranking is based on the 47,212 records in the FAA National Wildlife Strike Database for the years 1990 through 2003. These hazard rankings, in conjunction with site-specific Wildlife Hazards Assessments (WHA), will help airport operators determine the relative abundance and use patterns of wildlife species and help focus hazardous wildlife management efforts on those species most likely to cause problems at an airport.

Most public-use airports have large tracts of open, undeveloped land that provide added margins of safety and noise mitigation. These areas can also present potential hazards to aviation if they encourage wildlife to enter an airport's approach or departure airspace or air operations area (AOA). Constructed or natural areas—such as poorly drained locations, detention/retention ponds, roosting habitats on buildings, landscaping, odor-causing rotting organic matter (putrescible waste) disposal operations, wastewater treatment plants, agricultural or aquaculture activities, surface mining, or wetlands—can provide wildlife with ideal locations for feeding, loafing, reproduction, and escape. Even small facilities, such as fast food restaurants, taxicab staging areas, rental car facilities, aircraft viewing areas, and public parks, can produce substantial attractions for hazardous wildlife.

During the past century, wildlife-aircraft strikes have resulted in the loss of hundreds of lives worldwide, as well as billions of dollars in aircraft damage. Hazardous wildlife attractants on and near airports can jeopardize future airport expansion, making proper community land-use planning essential. This AC provides airport operators and those parties with whom they cooperate with the guidance they need to assess and address potentially hazardous wildlife attractants when locating new facilities and implementing certain land-use practices on or near public-use airports.

6. MEMORANDUM OF AGREEMENT BETWEEN FEDERAL RESOURCE AGENCIES. The FAA, the U.S. Air Force, the U.S. Army Corps of Engineers, the U.S. Environmental Protection Agency, the U.S. Fish and Wildlife Service, and the U.S. Department of Agriculture - Wildlife Services signed a Memorandum of Agreement (MOA) in July 2003 to acknowledge their respective missions in protecting aviation from wildlife hazards. Through the MOA, the agencies established procedures necessary to coordinate their missions to address more effectively existing and future environmental conditions contributing to collisions between wildlife and aircraft (wildlife strikes) throughout the United States. These efforts are intended to minimize wildlife risks to aviation and human safety while protecting the Nation’s valuable environmental resources.

DAVID L. BENNETT
Director, Office of Airport Safety
and Standards

Table 1. Ranking of 25 species groups as to relative hazard to aircraft (1=most hazardous) based on three criteria (damage, major damage, and effect-on-flight), a composite ranking based on all three rankings, and a relative hazard score. Data were derived from the FAA National Wildlife Strike Database, January 1990–April 2003.[1]

Species group	Ranking by criteria			Composite ranking[2]	Relative hazard score[3]
	Damage[4]	Major damage[5]	Effect on flight[6]		
Deer	1	1	1	1	100
Vultures	2	2	2	2	64
Geese	3	3	6	3	55
Cormorants/pelicans	4	5	3	4	54
Cranes	7	6	4	5	47
Eagles	6	9	7	6	41
Ducks	5	8	10	7	39
Osprey	8	4	8	8	39
Turkey/pheasants	9	7	11	9	33
Herons	11	14	9	10	27
Hawks (buteos)	10	12	12	11	25
Gulls	12	11	13	12	24
Rock pigeon	13	10	14	13	23
Owls	14	13	20	14	23
H. lark/s. bunting	18	15	15	15	17
Crows/ravens	15	16	16	16	16
Coyote	16	19	5	17	14
Mourning dove	17	17	17	18	14
Shorebirds	19	21	18	19	10
Blackbirds/starling	20	22	19	20	10
American kestrel	21	18	21	21	9
Meadowlarks	22	20	22	22	7
Swallows	24	23	24	23	4
Sparrows	25	24	23	24	4
Nighthawks	23	25	25	25	1

[1] Excerpted from the *Special Report for the FAA, "Ranking the Hazard Level of Wildlife Species to Civil Aviation in the USA: Update #1, July 2, 2003".* Refer to this report for additional explanations of criteria and method of ranking.

[2] Relative rank of each species group was compared with every other group for the three variables, placing the species group with the greatest hazard rank for $\geq$ 2 of the 3 variables above the next highest ranked group, then proceeding down the list.

[3] Percentage values, from Tables 3 and 4 in Footnote 1 of the *Special Report*, for the three criteria were summed and scaled down from 100, with 100 as the score for the species group with the maximum summed values and the greatest potential hazard to aircraft.

[4] Aircraft incurred at least some damage (destroyed, substantial, minor, or unknown) from strike.

[5] Aircraft incurred damage or structural failure, which adversely affected the structure strength, performance, or flight characteristics, and which would normally require major repair or replacement of the affected component, or the damage sustained makes it inadvisable to restore aircraft to airworthy condition.

[6] Aborted takeoff, engine shutdown, precautionary landing, or other.

This page intentionally left blank.

Table of Contents

SECTION 1. GENERAL SEPARATION CRITERIA FOR HAZARDOUS WILDLIFE ATTRACTANTS ON OR NEAR AIRPORTS. 1

1-1. INTRODUCTION 1

1-2. AIRPORTS SERVING PISTON-POWERED AIRCRAFT 1

1-3. AIRPORTS SERVING TURBINE-POWERED AIRCRAFT 1

1-4. PROTECTION OF APPROACH, DEPARTURE, AND CIRCLING AIRSPACE 1

SECTION 2. LAND-USE PRACTICES ON OR NEAR AIRPORTS THAT POTENTIALLY ATTRACT HAZARDOUS WILDLIFE 3

2-1. GENERAL 3

2-2. WASTE DISPOSAL OPERATIONS 3

2-3. WATER MANAGEMENT FACILITIES 5

2-4. WETLANDS 8

2-5. DREDGE SPOIL CONTAINMENT AREAS 9

2-6. AGRICULTURAL ACTIVITIES 9

2-7. GOLF COURSES, LANDSCAPING AND OTHER LAND-USE CONSIDERATIONS 10

2-8. SYNERGISTIC EFFECTS OF SURROUNDING LAND USES 11

SECTION 3. PROCEDURES FOR WILDLIFE HAZARD MANAGEMENT BY OPERATORS OF PUBLIC-USE AIRPORTS 13

3.1. INTRODUCTION 13

3.2. COORDINATION WITH USDA WILDLIFE SERVICES OR OTHER QUALIFIED WILDLIFE DAMAGE MANAGEMENT BIOLOGISTS 13

3-3. WILDLIFE HAZARD MANAGEMENT AT AIRPORTS: A MANUAL FOR AIRPORT PERSONNEL 13

3-4. WILDLIFE HAZARD ASSESSMENTS, TITLE 14, CODE OF FEDERAL REGULATIONS, PART 139 13

3-5. WILDLIFE HAZARD MANAGEMENT PLAN (WHMP) 14

3-6. LOCAL COORDINATION 14

3-7. COORDINATION/NOTIFICATION OF AIRMEN OF WILDLIFE HAZARDS 14

SECTION 4. FAA NOTIFICATION AND REVIEW OF PROPOSED LAND-USE PRACTICE CHANGES IN THE VICINITY OF PUBLIC-USE AIRPORTS 15

4-1. FAA REVIEW OF PROPOSED LAND-USE PRACTICE CHANGES IN THE VICINITY OF PUBLIC-USE AIRPORTS 15

4-2. WASTE MANAGEMENT FACILITIES 15

4-3. OTHER LAND-USE PRACTICE CHANGES 16

APPENDIX 1. DEFINITIONS OF TERMS USED IN THIS ADVISORY CIRCULAR 19

This page intentionally left blank.

SECTION 1.

GENERAL SEPARATION CRITERIA FOR HAZARDOUS WILDLIFE ATTRACTANTS ON OR NEAR AIRPORTS.

1-1. INTRODUCTION. When considering proposed land uses, airport operators, local planners, and developers must take into account whether the proposed land uses, including new development projects, will increase wildlife hazards. Land-use practices that attract or sustain hazardous wildlife populations on or near airports can significantly increase the potential for wildlife strikes.

The FAA recommends the minimum separation criteria outlined below for land-use practices that attract hazardous wildlife to the vicinity of airports. Please note that FAA criteria include land uses that cause movement of hazardous wildlife onto, into, or across the airport's approach or departure airspace or air operations area (AOA). (See the discussion of the synergistic effects of surrounding land uses in Section 2-8 of this AC.)

The basis for the separation criteria contained in this section can be found in existing FAA regulations. The separation distances are based on (1) flight patterns of piston-powered aircraft and turbine-powered aircraft, (2) the altitude at which most strikes happen (78 percent occur under 1,000 feet and 90 percent occur under 3,000 feet above ground level), and (3) National Transportation Safety Board (NTSB) recommendations.

1-2. AIRPORTS SERVING PISTON-POWERED AIRCRAFT. Airports that do not sell Jet-A fuel normally serve piston-powered aircraft. Notwithstanding more stringent requirements for specific land uses, the FAA recommends a separation distance of 5,000 feet at these airports for any of the hazardous wildlife attractants mentioned in Section 2 or for new airport development projects meant to accommodate aircraft movement. This distance is to be maintained between an airport's AOA and the hazardous wildlife attractant. Figure 1 depicts this separation distance measured from the nearest aircraft operations areas.

1-3. AIRPORTS SERVING TURBINE-POWERED AIRCRAFT. Airports selling Jet-A fuel normally serve turbine-powered aircraft. Notwithstanding more stringent requirements for specific land uses, the FAA recommends a separation distance of 10,000 feet at these airports for any of the hazardous wildlife attractants mentioned in Section 2 or for new airport development projects meant to accommodate aircraft movement. This distance is to be maintained between an airport's AOA and the hazardous wildlife attractant. Figure 1 depicts this separation distance from the nearest aircraft movement areas.

1-4. PROTECTION OF APPROACH, DEPARTURE, AND CIRCLING AIRSPACE. For all airports, the FAA recommends a distance of 5 statute miles between the farthest edge of the airport's AOA and the hazardous wildlife attractant if the attractant could cause hazardous wildlife movement into or across the approach or departure airspace.

Figure 1. Separation distances within which hazardous wildlife attractants should be avoided, eliminated, or mitigated.

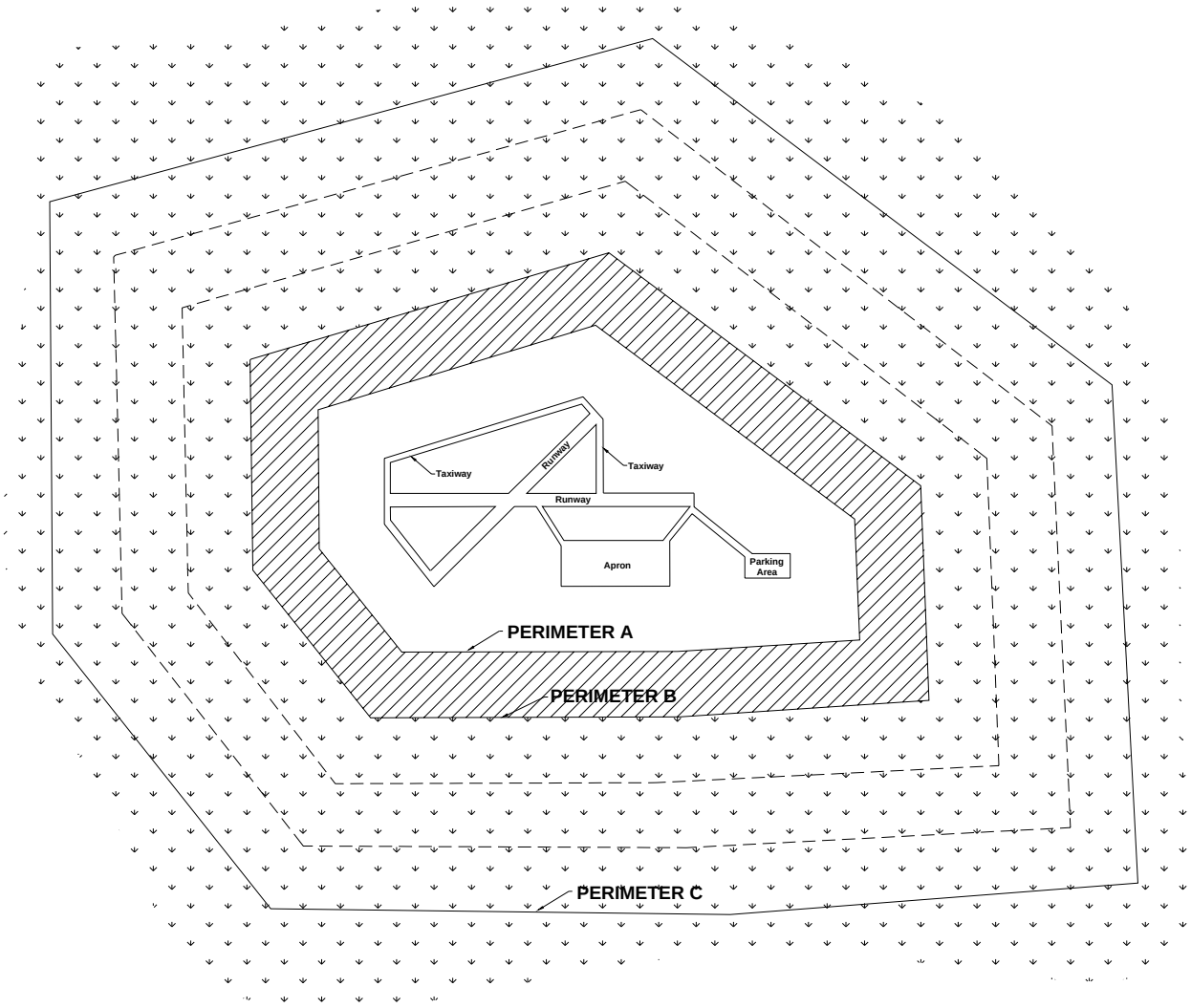

PERIMETER A: For airports serving piston-powered aircraft, hazardous wildlife attractants must be 5,000 feet from the nearest air operations area.

PERIMETER B: For airports serving turbine-powered aircraft, hazardous wildlife attractants must be 10,000 feet from the nearest air operations area.

PERIMETER C: 5-mile range to protect approach, departure and circling airspace.

SECTION 2.

LAND-USE PRACTICES ON OR NEAR AIRPORTS THAT POTENTIALLY ATTRACT HAZARDOUS WILDLIFE.

2-1. GENERAL. The wildlife species and the size of the populations attracted to the airport environment vary considerably, depending on several factors, including land-use practices on or near the airport. This section discusses land-use practices having the potential to attract hazardous wildlife and threaten aviation safety. In addition to the specific considerations outlined below, airport operators should refer to *Wildlife Hazard Management at Airports,* prepared by FAA and U.S. Department of Agriculture (USDA) staff. (This manual is available in English, Spanish, and French. It can be viewed and downloaded free of charge from the FAA's wildlife hazard mitigation web site: http://wildlife-mitigation.tc.FAA.gov.). And, *Prevention and Control of Wildlife Damage,* compiled by the University of Nebraska Cooperative Extension Division. (This manual is available online in a periodically updated version at: ianrwww.unl.edu/wildlife/solutions/handbook/.)

2-2. WASTE DISPOSAL OPERATIONS. Municipal solid waste landfills (MSWLF) are known to attract large numbers of hazardous wildlife, particularly birds. Because of this, these operations, when located within the separations identified in the siting criteria in Sections 1-2 through 1-4, are considered incompatible with safe airport operations.

a. Siting for new municipal solid waste landfills subject to AIR 21. Section 503 of the Wendell H. Ford Aviation Investment and Reform Act for the 21st Century (Public Law 106-181) (AIR 21) prohibits the construction or establishment of a new MSWLF within 6 statute miles of certain public-use airports. Before these prohibitions apply, both the airport and the landfill must meet the very specific conditions described below. These restrictions do not apply to airports or landfills located within the state of Alaska.

The airport must (1) have received a Federal grant(s) under 49 U.S.C. § 47101, et. seq.; (2) be under control of a public agency; (3) serve some scheduled air carrier operations conducted in aircraft with less than 60 seats; and (4) have total annual enplanements consisting of at least 51 percent of scheduled air carrier enplanements conducted in aircraft with less than 60 passenger seats.

The proposed MSWLF must (1) be within 6 miles of the airport, as measured from airport property line to MSWLF property line, and (2) have started construction or establishment on or after April 5, 2001. Public Law 106-181 only limits the construction or establishment of some new MSWLF. It does not limit the expansion, either vertical or horizontal, of existing landfills.

NOTE: Consult the most recent version of AC 150/5200-34, *Construction or Establishment of Landfills Near Public Airports,* for a more detailed discussion of these restrictions.

b. Siting for new MSWLF not subject to AIR 21. If an airport and MSWLF do not meet the restrictions of Public Law 106-181, the FAA recommends against locating MSWLF within the separation distances identified in Sections 1-2 through 1-4. The separation distances should be measured from the closest point of the airport's AOA to the closest planned MSWLF cell.

c. Considerations for existing waste disposal facilities within the limits of separation criteria. The FAA recommends against airport development projects that would increase the number of aircraft operations or accommodate larger or faster aircraft near MSWLF operations located within the separations identified in Sections 1-2 through 1-4. In addition, in accordance with 40 CFR 258.10, owners or operators of existing MSWLF units that are located within the separations listed in Sections 1-2 through 1-4 must demonstrate that the unit is designed and operated so it does not pose a bird hazard to aircraft. (See Section 4-2(b) of this AC for a discussion of this demonstration requirement.)

d. Enclosed trash transfer stations. Enclosed waste-handling facilities that receive garbage behind closed doors; process it via compaction, incineration, or similar manner; and remove all residue by enclosed vehicles generally are compatible with safe airport operations, provided they are not located on airport property or within the Runway Protection Zone (RPZ). These facilities should not handle or store putrescible waste outside or in a partially enclosed structure accessible to hazardous wildlife. Trash transfer facilities that are open on one or more sides; that store uncovered quantities of municipal solid waste outside, even if only for a short time; that use semi-trailers that leak or have trash clinging to the outside; or that do not control odors by ventilation and filtration systems (odor masking is not acceptable) do not meet the FAA's definition of fully enclosed trash transfer stations. The FAA considers these facilities incompatible with safe airport operations if they are located closer than the separation distances specified in Sections 1-2 through 1-4.

e. Composting operations on or near airport property. Composting operations that accept only yard waste (e.g., leaves, lawn clippings, or branches) generally do not attract hazardous wildlife. Sewage sludge, woodchips, and similar material are not municipal solid wastes and may be used as compost bulking agents. The compost, however, must never include food or other municipal solid waste. Composting operations should not be located on airport property. Off-airport property composting operations should be located no closer than the greater of the following distances: 1,200 feet from any AOA or the distance called for by airport design requirements (see AC 150/5300-13, *Airport Design*). This spacing should prevent material, personnel, or equipment from penetrating any Object Free Area (OFA), Obstacle Free Zone (OFZ), Threshold Siting Surface (TSS), or Clearway. Airport operators should monitor composting operations located in proximity to the airport to ensure that steam or thermal rise does not adversely affect air traffic. On-airport disposal of compost by-products should not be conducted for the reasons stated in 2-3f.

f. Underwater waste discharges. The FAA recommends against the underwater discharge of any food waste (e.g., fish processing offal) within the separations identified in Sections 1-2 through 1-4 because it could attract scavenging hazardous wildlife.

g. Recycling centers. Recycling centers that accept previously sorted non-food items, such as glass, newspaper, cardboard, or aluminum, are, in most cases, not attractive to hazardous wildlife and are acceptable.

h. Construction and demolition (C&D) debris facilities. C&D landfills do not generally attract hazardous wildlife and are acceptable if maintained in an orderly manner, admit no putrescible waste, and are not co-located with other waste disposal operations. However, C&D landfills have similar visual and operational characteristics to putrescible waste disposal sites. When co-located with putrescible waste disposal operations, C&D landfills are more likely to attract hazardous wildlife because of the similarities between these disposal facilities. Therefore, a C&D landfill co-located with another waste disposal operation should be located outside of the separations identified in Sections 1-2 through 1-4.

i. Fly ash disposal. The incinerated residue from resource recovery power/heat-generating facilities that are fired by municipal solid waste, coal, or wood is generally not a wildlife attractant because it no longer contains putrescible matter. Landfills accepting only fly ash are generally not considered to be wildlife attractants and are acceptable as long as they are maintained in an orderly manner, admit no putrescible waste of any kind, and are not co-located with other disposal operations that attract hazardous wildlife.

Since varying degrees of waste consumption are associated with general incineration (not resource recovery power/heat-generating facilities), the FAA considers the ash from general incinerators a regular waste disposal by-product and, therefore, a hazardous wildlife attractant if disposed of within the separation criteria outlined in Sections 1-2 through 1-4.

2-3. WATER MANAGEMENT FACILITIES. Drinking water intake and treatment facilities, storm water and wastewater treatment facilities, associated retention and settling ponds, ponds built for recreational use, and ponds that result from mining activities often attract large numbers of potentially hazardous wildlife. To prevent wildlife hazards, land-use developers and airport operators may need to develop management plans, in compliance with local and state regulations, to support the operation of storm water management facilities on or near all public-use airports to ensure a safe airport environment.

a. Existing storm water management facilities. On-airport storm water management facilities allow the quick removal of surface water, including discharges related to aircraft deicing, from impervious surfaces, such as pavement and terminal/hangar building roofs. Existing on-airport detention ponds collect storm water, protect water quality, and control runoff. Because they slowly release water

after storms, they create standing bodies of water that can attract hazardous wildlife. Where the airport has developed a Wildlife Hazard Management Plan (WHMP) in accordance with Part 139, the FAA requires immediate correction of any wildlife hazards arising from existing storm water facilities located on or near airports, using appropriate wildlife hazard mitigation techniques. Airport operators should develop measures to minimize hazardous wildlife attraction in consultation with a wildlife damage management biologist.

Where possible, airport operators should modify storm water detention ponds to allow a maximum 48-hour detention period for the design storm. The FAA recommends that airport operators avoid or remove retention ponds and detention ponds featuring dead storage to eliminate standing water. Detention basins should remain totally dry between rainfalls. Where constant flow of water is anticipated through the basin, or where any portion of the basin bottom may remain wet, the detention facility should include a concrete or paved pad and/or ditch/swale in the bottom to prevent vegetation that may provide nesting habitat.

When it is not possible to drain a large detention pond completely, airport operators may use physical barriers, such as bird balls, wires grids, pillows, or netting, to deter birds and other hazardous wildlife. When physical barriers are used, airport operators must evaluate their use and ensure they will not adversely affect water rescue. Before installing any physical barriers over detention ponds on Part 139 airports, airport operators must get approval from the appropriate FAA Regional Airports Division Office.

The FAA recommends that airport operators encourage off-airport storm water treatment facility operators to incorporate appropriate wildlife hazard mitigation techniques into storm water treatment facility operating practices when their facility is located within the separation criteria specified in Sections 1-2 through 1-4.

b. New storm water management facilities. The FAA strongly recommends that off-airport storm water management systems located within the separations identified in Sections 1-2 through 1-4 be designed and operated so as not to create above-ground standing water. Stormwater detention ponds should be designed, engineered, constructed, and maintained for a maximum 48–hour detention period after the design storm and remain completely dry between storms. To facilitate the control of hazardous wildlife, the FAA recommends the use of steep-sided, rip-rap lined, narrow, linearly shaped water detention basins. When it is not possible to place these ponds away from an airport's AOA, airport operators should use physical barriers, such as bird balls, wires grids, pillows, or netting, to prevent access of hazardous wildlife to open water and minimize aircraft-wildlife interactions. When physical barriers are used, airport operators must evaluate their use and ensure they will not adversely affect water rescue. Before installing any physical barriers over detention ponds on Part 139 airports, airport operators must get approval from the appropriate FAA Regional Airports Division Office. All vegetation in or around detention basins that provide food or cover for hazardous wildlife should be eliminated. If soil conditions and other requirements allow, the FAA encourages

the use of underground storm water infiltration systems, such as French drains or buried rock fields, because they are less attractive to wildlife.

c. **Existing wastewater treatment facilities.** The FAA strongly recommends that airport operators immediately correct any wildlife hazards arising from existing wastewater treatment facilities located on or near the airport. Where required, a WHMP developed in accordance with Part 139 will outline appropriate wildlife hazard mitigation techniques. Accordingly, airport operators should encourage wastewater treatment facility operators to incorporate measures, developed in consultation with a wildlife damage management biologist, to minimize hazardous wildlife attractants. Airport operators should also encourage those wastewater treatment facility operators to incorporate these mitigation techniques into their standard operating practices. In addition, airport operators should consider the existence of wastewater treatment facilities when evaluating proposed sites for new airport development projects and avoid such sites when practicable.

d. **New wastewater treatment facilities.** The FAA strongly recommends against the construction of new wastewater treatment facilities or associated settling ponds within the separations identified in Sections 1-2 through 1-4. Appendix 1 defines wastewater treatment facility as “any devices and/or systems used to store, treat, recycle, or reclaim municipal sewage or liquid industrial wastes.” The definition includes any pretreatment involving the reduction of the amount of pollutants or the elimination of pollutants prior to introducing such pollutants into a publicly owned treatment works (wastewater treatment facility). During the site-location analysis for wastewater treatment facilities, developers should consider the potential to attract hazardous wildlife if an airport is in the vicinity of the proposed site, and airport operators should voice their opposition to such facilities if they are in proximity to the airport.

e. **Artificial marshes.** In warmer climates, wastewater treatment facilities sometimes employ artificial marshes and use submergent and emergent aquatic vegetation as natural filters. These artificial marshes may be used by some species of flocking birds, such as blackbirds and waterfowl, for breeding or roosting activities. The FAA strongly recommends against establishing artificial marshes within the separations identified in Sections 1-2 through 1-4.

f. **Wastewater discharge and sludge disposal.** The FAA recommends against the discharge of wastewater or sludge on airport property because it may improve soil moisture and quality on unpaved areas and lead to improved turf growth that can be an attractive food source for many species of animals. Also, the turf requires more frequent mowing, which in turn may mutilate or flush insects or small animals and produce straw, both of which can attract hazardous wildlife. In addition, the improved turf may attract grazing wildlife, such as deer and geese. Problems may also occur when discharges saturate unpaved airport areas. The resultant soft, muddy conditions can severely restrict or prevent emergency vehicles from reaching accident sites in a timely manner.

2-4. WETLANDS. Wetlands provide a variety of functions and can be regulated by local, state, and Federal laws. Normally, wetlands are attractive to many types of wildlife, including many which rank high on the list of hazardous wildlife species (Table 1).

NOTE: If questions exist as to whether an area qualifies as a wetland, contact the local division of the U.S. Army Corps of Engineers, the Natural Resources Conservation Service, or a wetland consultant qualified to delineate wetlands.

a. Existing wetlands on or near airport property. If wetlands are located on or near airport property, airport operators should be alert to any wildlife use or habitat changes in these areas that could affect safe aircraft operations. At public-use airports, the FAA recommends immediately correcting, in cooperation with local, state, and Federal regulatory agencies, any wildlife hazards arising from existing wetlands located on or near airports. Where required, a WHMP will outline appropriate wildlife hazard mitigation techniques. Accordingly, airport operators should develop measures to minimize hazardous wildlife attraction in consultation with a wildlife damage management biologist.

b. New airport development. Whenever possible, the FAA recommends locating new airports using the separations from wetlands identified in Sections 1-2 through 1-4. Where alternative sites are not practicable, or when airport operators are expanding an existing airport into or near wetlands, a wildlife damage management biologist, in consultation with the U.S. Fish and Wildlife Service, the U.S. Army Corps of Engineers, and the state wildlife management agency should evaluate the wildlife hazards and prepare a WHMP that indicates methods of minimizing the hazards.

c. Mitigation for wetland impacts from airport projects. Wetland mitigation may be necessary when unavoidable wetland disturbances result from new airport development projects or projects required to correct wildlife hazards from wetlands. Wetland mitigation must be designed so it does not create a wildlife hazard. The FAA recommends that wetland mitigation projects that may attract hazardous wildlife be sited outside of the separations identified in Sections 1-2 through 1-4.

(1) Onsite mitigation of wetland functions. The FAA may consider exceptions to locating mitigation activities outside the separations identified in Sections 1-2 through 1-4 if the affected wetlands provide unique ecological functions, such as critical habitat for threatened or endangered species or ground water recharge, which cannot be replicated when moved to a different location. Using existing airport property is sometimes the only feasible way to achieve the mitigation ratios mandated in regulatory orders and/or settlement agreements with the resource agencies. Conservation easements are an additional means of providing mitigation for project impacts. Typically the airport operator continues to own the property, and an easement is created stipulating that the property will be maintained as habitat for state or Federally listed species.

Mitigation must not inhibit the airport operator's ability to effectively control hazardous wildlife on or near the mitigation site or effectively maintain other aspects of safe airport operations. Enhancing such mitigation areas to attract hazardous wildlife must be avoided. The FAA will review any onsite mitigation proposals to determine compatibility with safe airport operations. A wildlife damage management biologist should evaluate any wetland mitigation projects that are needed to protect unique wetland functions and that must be located in the separation criteria in Sections 1-2 through 1-4 before the mitigation is implemented. A WHMP should be developed to reduce the wildlife hazards.

(2) Offsite mitigation of wetland functions. The FAA recommends that wetland mitigation projects that may attract hazardous wildlife be sited outside of the separations identified in Sections 1-2 through 1-4 unless they provide unique functions that must remain onsite (see 2-4c(1)). Agencies that regulate impacts to or around wetlands recognize that it may be necessary to split wetland functions in mitigation schemes. Therefore, regulatory agencies may, under certain circumstances, allow portions of mitigation to take place in different locations.

(3) Mitigation banking. Wetland mitigation banking is the creation or restoration of wetlands in order to provide mitigation credits that can be used to offset permitted wetland losses. Mitigation banking benefits wetland resources by providing advance replacement for permitted wetland losses; consolidating small projects into larger, better-designed and managed units; and encouraging integration of wetland mitigation projects with watershed planning. This last benefit is most helpful for airport projects, as wetland impacts mitigated outside of the separations identified in Sections 1-2 through 1-4 can still be located within the same watershed. Wetland mitigation banks meeting the separation criteria offer an ecologically sound approach to mitigation in these situations. Airport operators should work with local watershed management agencies or organizations to develop mitigation banking for wetland impacts on airport property.

2-5. DREDGE SPOIL CONTAINMENT AREAS. The FAA recommends against locating dredge spoil containment areas (also known as Confined Disposal Facilities) within the separations identified in Sections 1-2 through 1-4 if the containment area or the spoils contain material that would attract hazardous wildlife.

2-6. AGRICULTURAL ACTIVITIES. Because most, if not all, agricultural crops can attract hazardous wildlife during some phase of production, the FAA recommends against the used of airport property for agricultural production, including hay crops, within the separations identified in Sections 1-2 through 1-4. . If the airport has no financial alternative to agricultural crops to produce income necessary to maintain the viability of the airport, then the airport shall follow the crop distance guidelines listed in the table titled "Minimum Distances between Certain Airport Features and Any On-Airport Agricultural Crops" found in AC 150/5300-13, *Airport Design*, Appendix 17. The cost of wildlife control and potential accidents should be weighed against the income produced by the on-airport crops when deciding whether to allow crops on the airport.

a. **Livestock production.** Confined livestock operations (i.e., feedlots, dairy operations, hog or chicken production facilities, or egg laying operations) often attract flocking birds, such as starlings, that pose a hazard to aviation. Therefore, The FAA recommends against such facilities within the separations identified in Sections 1-2 through 1-4. Any livestock operation within these separations should have a program developed to reduce the attractiveness of the site to species that are hazardous to aviation safety. Free-ranging livestock must not be grazed on airport property because the animals may wander onto the AOA. Furthermore, livestock feed, water, and manure may attract birds.

b. **Aquaculture.** Aquaculture activities (i.e. catfish or trout production) conducted outside of fully enclosed buildings are inherently attractive to a wide variety of birds. Existing aquaculture facilities/activities within the separations listed in Sections 1-2 through 1-4 must have a program developed to reduce the attractiveness of the sites to species that are hazardous to aviation safety. Airport operators should also oppose the establishment of new aquaculture facilities/activities within the separations listed in Sections 1-2 through 1-4.

c. **Alternative uses of agricultural land.** Some airports are surrounded by vast areas of farmed land within the distances specified in Sections 1-2 through 1-4. Seasonal uses of agricultural land for activities such as hunting can create a hazardous wildlife situation. In some areas, farmers will rent their land for hunting purposes. Rice farmers, for example, flood their land during waterfowl hunting season and obtain additional revenue by renting out duck blinds. The duck hunters then use decoys and call in hundreds, if not thousands, of birds, creating a tremendous threat to aircraft safety. A wildlife damage management biologist should review, in coordination with local farmers and producers, these types of seasonal land uses and incorporate them into the WHMP.

2-7. GOLF COURSES, LANDSCAPING AND OTHER LAND-USE CONSIDERATIONS.

a. **Golf courses.** The large grassy areas and open water found on most golf courses are attractive to hazardous wildlife, particularly Canada geese and some species of gulls. These species can pose a threat to aviation safety. The FAA recommends against construction of new golf courses within the separations identified in Sections 1-2 through 1-4. Existing golf courses located within these separations must develop a program to reduce the attractiveness of the sites to species that are hazardous to aviation safety. Airport operators should ensure these golf courses are monitored on a continuing basis for the presence of hazardous wildlife. If hazardous wildlife is detected, corrective actions should be immediately implemented.

b. **Landscaping and landscape maintenance.** Depending on its geographic location, landscaping can attract hazardous wildlife. The FAA recommends that airport operators approach landscaping with caution and confine it to airport areas not associated with aircraft movements. A wildlife damage management biologist should review all landscaping plans. Airport operators should also monitor all landscaped areas on a continuing basis for the presence of hazardous wildlife. If

hazardous wildlife is detected, corrective actions should be immediately implemented.

Turf grass areas can be highly attractive to a variety of hazardous wildlife species. Research conducted by the USDA Wildlife Services' National Wildlife Research Center has shown that no one grass management regime will deter all species of hazardous wildlife in all situations. In cooperation with wildlife damage management biologist, airport operators should develop airport turf grass management plans on a prescription basis, depending on the airport's geographic locations and the type of hazardous wildlife likely to frequent the airport

Airport operators should ensure that plant varieties attractive to hazardous wildlife are not used on the airport. Disturbed areas or areas in need of re-vegetating should not be planted with seed mixtures containing millet or any other large-seed producing grass. For airport property already planted with seed mixtures containing millet, rye grass, or other large-seed producing grasses, the FAA recommends disking, plowing, or another suitable agricultural practice to prevent plant maturation and seed head production. Plantings should follow the specific recommendations for grass management and seed and plant selection made by the State University Cooperative Extension Service, the local office of Wildlife Services, or a qualified wildlife damage management biologist. Airport operators should also consider developing and implementing a preferred/prohibited plant species list, reviewed by a wildlife damage management biologist, which has been designed for the geographic location to reduce the attractiveness to hazardous wildlife for landscaping airport property.

c. **Airports surrounded by wildlife habitat.** The FAA recommends that operators of airports surrounded by woodlands, water, or wetlands refer to Section 2.4 of this AC. Operators of such airports should provide for a Wildlife Hazard Assessment (WHA) conducted by a wildlife damage management biologist. This WHA is the first step in preparing a WHMP, where required.

d. **Other hazardous wildlife attractants.** Other specific land uses or activities (e.g., sport or commercial fishing, shellfish harvesting, etc.), perhaps unique to certain regions of the country, have the potential to attract hazardous wildlife. Regardless of the source of the attraction, when hazardous wildlife is noted on a public-use airport, airport operators must take prompt remedial action(s) to protect aviation safety.

2-8. SYNERGISTIC EFFECTS OF SURROUNDING LAND USES. There may be circumstances where two (or more) different land uses that would not, by themselves, be considered hazardous wildlife attractants or that are located outside of the separations identified in Sections 1-2 through 1-4 that are in such an alignment with the airport as to create a wildlife corridor directly through the airport and/or surrounding airspace. An example of this situation may involve a lake located outside of the separation criteria on the east side of an airport and a large hayfield on the west side of an airport, land uses that together could create a flyway for Canada geese directly across the airspace of the airport. There are numerous examples of such situations;

therefore, airport operators and the wildlife damage management biologist must consider the entire surrounding landscape and community when developing the WHMP.

SECTION 3.

PROCEDURES FOR WILDLIFE HAZARD MANAGEMENT BY OPERATORS OF PUBLIC-USE AIRPORTS.

3.1. INTRODUCTION. In recognition of the increased risk of serious aircraft damage or the loss of human life that can result from a wildlife strike, the FAA may require the development of a Wildlife Hazard Management Plan (WHMP) when specific triggering events occur on or near the airport. Part 139.337 discusses the specific events that trigger a Wildlife Hazard Assessment (WHA) and the specific issues that a WHMP must address for FAA approval and inclusion in an Airport Certification Manual.

3.2. COORDINATION WITH USDA WILDLIFE SERVICES OR OTHER QUALIFIED WILDLIFE DAMAGE MANAGEMENT BIOLOGISTS. The FAA will use the Wildlife Hazard Assessment (WHA) conducted in accordance with Part 139 to determine if the airport needs a WHMP. Therefore, persons having the education, training, and expertise necessary to assess wildlife hazards must conduct the WHA. The airport operator may look to Wildlife Services or to qualified private consultants to conduct the WHA. When the services of a wildlife damage management biologist are required, the FAA recommends that land-use developers or airport operators contact a consultant specializing in wildlife damage management or the appropriate state director of Wildlife Services.

NOTE: Telephone numbers for the respective USDA Wildlife Services state offices can be obtained by contacting USDA Wildlife Services Operational Support Staff, 4700 River Road, Unit 87, Riverdale, MD, 20737-1234, Telephone (301) 734-7921, Fax (301) 734-5157 *(http://www.aphis.usda.gov/ws/)*.

3-3. WILDLIFE HAZARD MANAGEMENT AT AIRPORTS: A MANUAL FOR AIRPORT PERSONNEL. This manual, prepared by FAA and USDA Wildlife Services staff, contains a compilation of information to assist airport personnel in the development, implementation, and evaluation of WHMPs at airports. The manual includes specific information on the nature of wildlife strikes, legal authority, regulations, wildlife management techniques, WHAs, WHMPs, and sources of help and information. The manual is available in three languages: English, Spanish, and French. It can be viewed and downloaded free of charge from the FAA's wildlife hazard mitigation web site: http://wildlife-mitigation.tc.FAA.gov/. This manual only provides a starting point for addressing wildlife hazard issues at airports. Hazardous wildlife management is a complex discipline and conditions vary widely across the United States. Therefore, qualified wildlife damage management biologists must direct the development of a WHMP and the implementation of management actions by airport personnel.

There are many other resources complementary to this manual for use in developing and implementing WHMPs. Several are listed in the manual's bibliography.

3-4. WILDLIFE HAZARD ASSESSMENTS, TITLE 14, CODE OF FEDERAL REGULATIONS, PART 139. Part 139.337(b) requires airport operators to conduct a Wildlife Hazard Assessment (WHA) when certain events occur on or near the airport.

Part 139.337 (c) provides specific guidance as to what facts must be addressed in a WHA.

3-5. WILDLIFE HAZARD MANAGEMENT PLAN (WHMP). The FAA will consider the results of the WHA, along with the aeronautical activity at the airport and the views of the airport operator and airport users, in determining whether a formal WHMP is needed, in accordance with Part 139.337. If the FAA determines that a WHMP is needed, the airport operator must formulate and implement a WHMP, using the WHA as the basis for the plan.

The goal of an airport's Wildlife Hazard Management Plan is to minimize the risk to aviation safety, airport structures or equipment, or human health posed by populations of hazardous wildlife on and around the airport.

The WHMP must identify hazardous wildlife attractants on or near the airport and the appropriate wildlife damage management techniques to minimize the wildlife hazard. It must also prioritize the management measures.

3-6. LOCAL COORDINATION. The establishment of a Wildlife Hazards Working Group (WHWG) will facilitate the communication, cooperation, and coordination of the airport and its surrounding community necessary to ensure the effectiveness of the WHMP. The cooperation of the airport community is also necessary when new projects are considered. Whether on or off the airport, the input from all involved parties must be considered when a potentially hazardous wildlife attractant is being proposed. Airport operators should also incorporate public education activities with the local coordination efforts because some activities in the vicinity of your airport, while harmless under normal leisure conditions, can attract wildlife and present a danger to aircraft. For example, if public trails are planned near wetlands or in parks adjoining airport property, the public should know that feeding birds and other wildlife in the area may pose a risk to aircraft.

Airport operators should work with local and regional planning and zoning boards so as to be aware of proposed land-use changes, or modification of existing land uses, that could create hazardous wildlife attractants within the separations identified in Sections 1-2 through 1-4. Pay particular attention to proposed land uses involving creation or expansion of waste water treatment facilities, development of wetland mitigation sites, or development or expansion of dredge spoil containment areas. At the very least, airport operators must ensure they are on the notification list of the local planning board or equivalent review entity for all communities located within 5 miles of the airport, so they will receive notification of any proposed project and have the opportunity to review it for attractiveness to hazardous wildlife.

3-7 COORDINATION/NOTIFICATION OF AIRMEN OF WILDLIFE HAZARDS. If an existing land-use practice creates a wildlife hazard and the land-use practice or wildlife hazard cannot be immediately eliminated, airport operators must issue a Notice to Airmen (NOTAM) and encourage the land–owner or manager to take steps to control the wildlife hazard and minimize further attraction.

SECTION 4.

FAA NOTIFICATION AND REVIEW OF PROPOSED LAND-USE PRACTICE CHANGES IN THE VICINITY OF PUBLIC-USE AIRPORTS

4-1. FAA REVIEW OF PROPOSED LAND-USE PRACTICE CHANGES IN THE VICINITY OF PUBLIC-USE AIRPORTS.

a. The FAA discourages the development of waste disposal and other facilities, discussed in Section 2, located within the 5,000/10,000-foot criteria specified in Sections 1-2 through 1-4.

b. For projects that are located outside the 5,000/10,000-foot criteria but within 5 statute miles of the airport's AOA, the FAA may review development plans, proposed land-use changes, operational changes, or wetland mitigation plans to determine if such changes present potential wildlife hazards to aircraft operations. The FAA considers sensitive airport areas as those that lie under or next to approach or departure airspace. This brief examination should indicate if further investigation is warranted.

c. Where a wildlife damage management biologist has conducted a further study to evaluate a site's compatibility with airport operations, the FAA may use the study results to make a determination.

4-2. WASTE MANAGEMENT FACILITIES.

a. Notification of new/expanded project proposal. Section 503 of the Wendell H. Ford Aviation Investment and Reform Act for the 21st Century (Public Law 106-181) limits the construction or establishment of new MSWLF within 6 statute miles of certain public-use airports, when both the airport and the landfill meet very specific conditions. See Section 2-2 of this AC and AC 150/5200-34 for a more detailed discussion of these restrictions.

The Environmental Protection Agency (EPA) requires any MSWLF operator proposing a new or expanded waste disposal operation within 5 statute miles of a runway end to notify the appropriate FAA Regional Airports Division Office and the airport operator of the proposal (40 CFR 258, *Criteria for Municipal Solid Waste Landfills*, Section 258.10, *Airport Safety*). The EPA also requires owners or operators of new MSWLF units, or lateral expansions of existing MSWLF units, that are located within 10,000 feet of any airport runway end used by turbojet aircraft, or within 5,000 feet of any airport runway end used only by piston-type aircraft, to demonstrate successfully that such units are not hazards to aircraft. (See 4-2.b below.)

When new or expanded MSWLF are being proposed near airports, MSWLF operators must notify the airport operator and the FAA of the proposal as early as possible pursuant to 40 CFR 258.

b. Waste handling facilities within separations identified in Sections 1-2 through 1-4. To claim successfully that a waste-handling facility sited within the separations identified in Sections 1-2 through 1-4 does not attract hazardous wildlife and does not threaten aviation, the developer must establish convincingly that the facility will not handle putrescible material other than that as outlined in 2-2.d. The FAA strongly recommends against any facility other than that as outlined in 2-2.d (enclosed transfer stations). The FAA will use this information to determine if the facility will be a hazard to aviation.

c. Putrescible-Waste Facilities. In their effort to satisfy the EPA requirement, some putrescible-waste facility proponents may offer to undertake experimental measures to demonstrate that their proposed facility will not be a hazard to aircraft. To date, no such facility has been able to demonstrate an ability to reduce and sustain hazardous wildlife to levels that existed before the putrescible-waste landfill began operating. For this reason, demonstrations of experimental wildlife control measures may not be conducted within the separation identified in Sections 1-2 through 1-4.

4-3. OTHER LAND-USE PRACTICE CHANGES. As a matter of policy, the FAA encourages operators of public-use airports who become aware of proposed land use practice changes that may attract hazardous wildlife within 5 statute miles of their airports to promptly notify the FAA. The FAA also encourages proponents of such land use changes to notify the FAA as early in the planning process as possible. Advanced notice affords the FAA an opportunity (1) to evaluate the effect of a particular land-use change on aviation safety and (2) to support efforts by the airport sponsor to restrict the use of land next to or near the airport to uses that are compatible with the airport.

The airport operator, project proponent, or land-use operator may use FAA Form 7460-1, *Notice of Proposed Construction or Alteration*, or other suitable documents similar to FAA Form 7460-1 to notify the appropriate FAA Regional Airports Division Office. Project proponents can contact the appropriate FAA Regional Airports Division Office for assistance with the notification process.

It is helpful if the notification includes a 15-minute quadrangle map of the area identifying the location of the proposed activity. The land-use operator or project proponent should also forward specific details of the proposed land-use change or operational change or expansion. In the case of solid waste landfills, the information should include the type of waste to be handled, how the waste will be processed, and final disposal methods.

a. Airports that have received Federal grant-in-aid assistance. Airports that have received Federal grant-in-aid assistance are required by their grant assurances to take appropriate actions to restrict the use of land next to or near the airport to uses that are compatible with normal airport operations. The FAA recommends that airport operators to the extent practicable oppose off-airport land-use changes or practices within the separations identified in Sections 1-2 through 1-4 that may attract hazardous wildlife. Failure to do so may lead to noncompliance with applicable grant assurances. The FAA will not approve the placement of airport

development projects pertaining to aircraft movement in the vicinity of hazardous wildlife attractants without appropriate mitigating measures. Increasing the intensity of wildlife control efforts is not a substitute for eliminating or reducing a proposed wildlife hazard. Airport operators should identify hazardous wildlife attractants and any associated wildlife hazards during any planning process for new airport development projects.

This page intentionally left blank.

APPENDIX 1. DEFINITIONS OF TERMS USED IN THIS ADVISORY CIRCULAR.

1. GENERAL. This appendix provides definitions of terms used throughout this AC.

1. **Air operations area.** Any area of an airport used or intended to be used for landing, takeoff, or surface maneuvering of aircraft. An air operations area includes such paved areas or unpaved areas that are used or intended to be used for the unobstructed movement of aircraft in addition to its associated runway, taxiways, or apron.

2. **Airport operator.** The operator (private or public) or sponsor of a public-use airport.

3. **Approach or departure airspace.** The airspace, within 5 statute miles of an airport, through which aircraft move during landing or takeoff.

4. **Bird balls.** High-density plastic floating balls that can be used to cover ponds and prevent birds from using the sites.

5. **Certificate holder.** The holder of an Airport Operating Certificate issued under Title 14, Code of Federal Regulations, Part 139.

6. **Construct a new MSWLF.** To begin to excavate, grade land, or raise structures to prepare a municipal solid waste landfill as permitted by the appropriate regulatory or permitting agency.

7. **Detention ponds.** Storm water management ponds that hold storm water for short periods of time, a few hours to a few days.

8. **Establish a new MSWLF.** When the first load of putrescible waste is received on-site for placement in a prepared municipal solid waste landfill.

9. **Fly ash.** The fine, sand-like residue resulting from the complete incineration of an organic fuel source. Fly ash typically results from the combustion of coal or waste used to operate a power generating plant.

10. **General aviation aircraft.** Any civil aviation aircraft not operating under 14 CFR Part 119, Certification: Air Carriers and Commercial Operators.

11. **Hazardous wildlife.** Species of wildlife (birds, mammals, reptiles), including feral animals and domesticated animals not under control, that are associated with aircraft strike problems, are capable of causing structural damage to airport facilities, or act as attractants to other wildlife that pose a strike hazard

12. **Municipal Solid Waste Landfill (MSWLF).** A publicly or privately owned discrete area of land or an excavation that receives household waste and that is not a land application unit, surface impoundment, injection well, or waste pile, as those terms are defined under 40 CFR § 257.2. An MSWLF may receive

other types wastes, such as commercial solid waste, non-hazardous sludge, small-quantity generator waste, and industrial solid waste, as defined under 40 CFR § 258.2. An MSWLF can consist of either a stand alone unit or several cells that receive household waste.

13. **New MSWLF.** A municipal solid waste landfill that was established or constructed after April 5, 2001.

14. **Piston-powered aircraft.** Fixed-wing aircraft powered by piston engines.

15. **Piston-use airport.** Any airport that does not sell Jet-A fuel for fixed-wing turbine-powered aircraft, and primarily serves fixed-wing, piston-powered aircraft. Incidental use of the airport by turbine-powered, fixed-wing aircraft would not affect this designation. However, such aircraft should not be based at the airport.

16. **Public agency.** A State or political subdivision of a State, a tax-supported organization, or an Indian tribe or pueblo (49 U.S.C. § 47102(19)).

17. **Public airport.** An airport used or intended to be used for public purposes that is under the control of a public agency; and of which the area used or intended to be used for landing, taking off, or surface maneuvering of aircraft is publicly owned (49 U.S.C. § 47102(20)).

18. **Public-use airport.** An airport used or intended to be used for public purposes, and of which the area used or intended to be used for landing, taking off, or surface maneuvering of aircraft may be under the control of a public agency or privately owned and used for public purposes (49 U.S.C. § 47102(21)).

19. **Putrescible waste.** Solid waste that contains organic matter capable of being decomposed by micro-organisms and of such a character and proportion as to be capable of attracting or providing food for birds (40 CFR §257.3-8).

20. **Putrescible-waste disposal operation.** Landfills, garbage dumps, underwater waste discharges, or similar facilities where activities include processing, burying, storing, or otherwise disposing of putrescible material, trash, and refuse.

21. **Retention ponds.** Storm water management ponds that hold water for several months.

22. **Runway protection zone (RPZ).** An area off the runway end to enhance the protection of people and property on the ground (see AC 150/5300-13). The dimensions of this zone vary with the airport design, aircraft, type of operation, and visibility minimum.

23. **Scheduled air carrier operation.** Any common carriage passenger-carrying operation for compensation or hire conducted by an air carrier or commercial

operator for which the air carrier, commercial operator, or their representative offers in advance the departure location, departure time, and arrival location. It does not include any operation that is conducted as a supplemental operation under 14 CFR Part 119 or as a public charter operation under 14 CFR Part 380 (14 CFR § 119.3).

24. **Sewage sludge.** Any solid, semi-solid, or liquid residue generated during the treatment of domestic sewage in a treatment works. Sewage sludge includes, but is not limited to, domestic septage; scum or solids removed in primary, secondary, or advanced wastewater treatment process; and a material derived from sewage sludge. Sewage does not include ash generated during the firing of sewage sludge in a sewage sludge incinerator or grit and screenings generated during preliminary treatment of domestic sewage in a treatment works. (40 CFR 257.2)

25. **Sludge.** Any solid, semi-solid, or liquid waste generated form a municipal, commercial or industrial wastewater treatment plant, water supply treatment plant, or air pollution control facility or any other such waste having similar characteristics and effect. (40 CFR 257.2)

26. **Solid waste.** Any garbage, refuse, sludge, from a waste treatment plant, water supply treatment plant or air pollution control facility and other discarded material, including, solid liquid, semisolid, or contained gaseous material resulting from industrial, commercial, mining, and agricultural operations, and from community activities, but does not include solid or dissolved materials in domestic sewage, or solid or dissolved material in irrigation return flows or industrial discharges which are point sources subject to permits under section 402 of the Federal Water Pollution Control Act, as amended (86 Stat. 880), or source, special nuclear, or by product material as defined by the Atomic Energy Act of 1954, as amended, (68 Stat. 923). (40 CFR 257.2)

27. **Turbine-powered aircraft.** Aircraft powered by turbine engines including turbojets and turboprops but excluding turbo-shaft rotary-wing aircraft.

28. **Turbine-use airport.** Any airport that sells Jet-A fuel for fixed-wing turbine-powered aircraft.

29. **Wastewater treatment facility.** Any devices and/or systems used to store, treat, recycle, or reclaim municipal sewage or liquid industrial wastes, including Publicly Owned Treatment Works (POTW), as defined by Section 212 of the Federal Water Pollution Control Act (P.L. 92-500) as amended by the Clean Water Act of 1977 (P.L. 95-576) and the Water Quality Act of 1987 (P.L. 100-4). This definition includes any pretreatment involving the reduction of the amount of pollutants, the elimination of pollutants, or the alteration of the nature of pollutant properties in wastewater prior to or in lieu of discharging or otherwise introducing such pollutants into a POTW. (See 40 CFR Section 403.3 (q), (r), & (s)).

30. Wildlife. Any wild animal, including without limitation any wild mammal, bird, reptile, fish, amphibian, mollusk, crustacean, arthropod, coelenterate, or other invertebrate, including any part, product, egg, or offspring thereof (50 CFR 10.12, *Taking, Possession, Transportation, Sale, Purchase, Barter, Exportation, and Importation of Wildlife and Plants*). As used in this AC, wildlife includes feral animals and domestic animals out of the control of their owners (14 CFR Part 139, Certification of Airports).

31. Wildlife attractants. Any human-made structure, land-use practice, or human-made or natural geographic feature that can attract or sustain hazardous wildlife within the landing or departure airspace or the airport's AOA. These attractants can include architectural features, landscaping, waste disposal sites, wastewater treatment facilities, agricultural or aquaculture activities, surface mining, or wetlands.

32. Wildlife hazard. A potential for a damaging aircraft collision with wildlife on or near an airport.

33. Wildlife strike. A wildlife strike is deemed to have occurred when:

a. A pilot reports striking 1 or more birds or other wildlife;

b. Aircraft maintenance personnel identify aircraft damage as having been caused by a wildlife strike;

c. Personnel on the ground report seeing an aircraft strike 1 or more birds or other wildlife;

d. Bird or other wildlife remains, whether in whole or in part, are found within 200 feet of a runway centerline, unless another reason for the animal's death is identified;

e. The animal's presence on the airport had a significant negative effect on a flight (i.e., aborted takeoff, aborted landing, high-speed emergency stop, aircraft left pavement area to avoid collision with animal) (Transport Canada, Airports Group, *Wildlife Control Procedures Manual*, Technical Publication 11500E, 1994).

2. RESERVED.

APPENDIX D

Methods for Determining Concentrations of People

Introduction

The underlying compatibility criterion used in this ALUCP is "usage intensity", or more specifically, the maximum number of people per acre that can be present in a given location at any given time. Actions considered "incompatible" with the compatibility planning policies in this ALUCP would be uses that exceed the maximum intensity. Usage intensity is identified in the *California Airport Land Use Planning Handbook* (Caltrans, January 2002) as the means best suited for assessing land use safety compatibility for airports. Recognition, however, must be given to the fact that "people per acre" is not a common measure employed in other facets of land use planning. As such, this ALUCP utilizes the more common measure of floor area ratio (FAR) as a means of applying usage criteria.

Counting People

Determining the number of people expected to use a facility at a single point in time involves estimating not just employees, but customers and visitors as well. Exceptions can be made in rare situations when a facility is used for an event it is not designed for (i.e, when a parking lot is used for a fairground), and it is expected that extra precautions be taken as appropriate.

In ideal situations, the actual or intended number of people for which a facility is designed would be known. However, many buildings are constructed without a specific number of occupants in mind, and the use of the site remains unknown until a tenant is found. Other uses can further compound the question of usage intensity when they are open, or have no fixed seating, like malls and athletic fields for example.

Given the lack of measurable occupancy numbers, other sources can be used to determine the number of people in a proposed development.

- *Parking Ordinance*: The number of people present in a given area can be calculated based upon the number of parking spaces provided. Some assumption regarding the number of people per vehicle needs to be developed to calculate the number of people on-site. The number of people per acre can then be calculated by dividing the number of people on-site by the size of the parcel in acres. This approach is appropriate where the use is expected to be dependent upon access by vehicles. Depending upon the specific

assumptions utilized, this methodology typically results in a number in the low end of the likely intensity for a given land use.

- *Maximum Occupancy*: The Uniform or California Building Code (CBC) can be used as a standard for determining the maximum occupancy of certain uses. The chart provided in Table D-1 indicates the required number of square feet per occupant. The number of people on the site can be calculated by dividing the total floor area of a proposed use by the minimum square feet per occupant requirement listed in the table.

Sample calculations based upon parking space requirements and the Uniform Building Code are provided in Exhibit D-1.

Calculating Usage Intensities

Once the number of people expected to be present over an entire site has been estimated, the usage intensity can be determined. The criteria presented in Chapter 3 of this ALUCP were developed in terms of average intensity over the project site as a whole.

The average intensity is developed by dividing the total number of people expected to use a site by the size of the site itself (e.g., 400 people / 5 acre site = average intensity of 80 people per acre). Once the average usage intensity of a proposed project has been determined, the results can be compared with the criteria set forth in this ALUCP in order to determine consistency.

Calculating Floor Area Ratio

Floor area ration (FAR), the gross square footage of the building(s) on a site divided by the site size, is a more common measure in land use planning than usage intensity calculations. As such, FAR criteria, as seen in Table 3-2, were integrated into this ALUCP in order to establish usage intensity limits for various types of nonresidential land uses.

FAR, however, does not directly relate to the underlying issue of risk due to the fact that the FAR for different types of buildings can be the same despite their level of use (e.g., a warehouse versus a restaurant). Therefore, in order to make FAR applicable to land use compatibility planning, a connection between usage intensity and FAR needed to be established. To achieve this, assumptions, rooted in the CBC, were made as to how much square footage a person may occupy in a given building (see Table D-1). Once this was determined, the following equation was applied to determine the FAR for a given nonresidential use:

$$\text{FAR} = \frac{\text{(allowable usage intensity) x (occupancy load factor)}}{\text{43,560 sq. feet per acre}}$$

In this equation, *usage intensity* is understood in terms of people per acre, and *occupancy load factor* as square feet per person. The guideline for determining usage intensity numbers is found in the *Handbook* (see Appendix C), and the occupancy levels were provided in the CBC (see Table D-2). The FAR limits were calculated from these two numbers using the formula above.

EXHIBIT D-1

Example 1

Proposed Development: Two office buildings, each two stories and containing 20,000 square feet of floor area per building. Site size is 3.0 net acres. Counting a portion of the adjacent road, the gross area of the site is 3.5± acres.

A. Calculation Based on Parking Space Requirements

For office uses, assume that a county or city parking ordinance requires 1 parking space for every 300 square feet of floor area. Data from traffic studies or other sources can be used to estimate the average vehicle occupancy. For the purposes of this example, the number of people on the property is assumed to equal 1.5 times the number of parking spaces.

The average usage intensity would therefore be calculated as follows:

1) 40,000 sq. ft. floor area x 1.0 parking space per 300 sq. ft. = 134 required parking spaces
2) 134 parking spaces x 1.5 people per space = 200 people maximum on site
3) 200 people ÷ 3.5 acres gross site size = 57 people per acre average for the site

Assuming that occupancy of each building is relatively equal throughout, but that there is some separation between the buildings and outdoor uses are minimal, the usage intensity for a single acre would be estimated to be:

1) 20,000 sq. ft. bldg. ÷ 2 stories = 10,000 sq. ft. bldg. footprint
2) 10,000 sq. ft. bldg. footprint ÷ 43,560 sq. ft. per acre = 0.23 acre bldg. footprint
3) Building footprint < 1.0 acre; therefore maximum people in 1 acre = bldg. occupancy = 100 people per single acre

B. Calculation Based on Uniform Building Code

Using the UBC (Appendix C1) as the basis for estimating building occupancy yields the following results for the above example:

1) 40,000 sq. ft. bldg. ÷ 100 sq. ft./occupant = 400 people max. bldg. occupancy (under UBC)
2) 400 max. bldg. occupancy x 50% adjustment = 200 people maximum on site
3) 200 people ÷ 3.5 acres gross site size = 57 people per acre average for the site

Conclusions: In this instance, both methodologies give the same results. For different uses and/or different assumptions, the two methodologies are likely to produce different numbers. In most such cases, the UBC methodology will indicate a higher intensity.

EXHIBIT D-1 CONT.

Example 2

Proposed Development: Single-floor furniture store containing 24,000 square feet of floor area on a site of 1.7 net acres. Counting a portion of the adjacent road, the gross area of the site is 2.0 acres).

A. Calculation Based on Parking Space Requirements

For furniture stores, the county requires 1 parking space per 400 square feet of use area. Assuming 1.5 people per automobile, the average usage intensity would be:

1) 24,000 sq. ft. bldg. x 1.0 parking space per 400 sq. ft. = 60 required parking spaces
2) 60 parking spaces x 1.5 people per space = 90 people maximum on site
3) 90 people ÷ 1.26 acres gross site size = 72 people per acre average for the site

Again assuming a relatively balanced occupancy throughout the building and that outdoor uses are mini mal, the usage intensity for a single acre would be estimated to be:

1) 24,000 sq. ft. bldg. footprint ÷ 43,560 sq. ft. per acre = 0.55 acre bldg. footprint
3) Building footprint < 1.0 acre; therefore maximum people in 1 acre = bldg. occupancy = 90 people per single acre

B. Calculation Based on Uniform Building Code

For the purposes of the UBC-based methodology, the furniture store is assumed to be consist of 50% retail sales floor (at 30 square feet per occupant) and 50% warehouse (at 500 square feet per occupant). Usage intensities would therefore be estimated as follows:

1) 12,000 sq. ft. retail floor area ÷ 30 sq. ft./occupant = 400 people max. occupancy in retail area
2) 12,000 sq. ft. warehouse floor area ÷ 500 sq. ft./occupant = 24 people max. occupancy in warehouse area
3) Maximum occupancy under UBC assumptions = 400 + 24 = 424 people
4) Assuming typical peak occupancy is 50% of UBC numbers = 212 people maximum expected at any one time
5) 212 people ÷ 1.26 acres = 168 people per acre average for the site

With respect to the single-acre intensity criteria, the entire building occupancy would again be within less than 1.0 acre, thus yielding the same intensity of 168 people per single acre.

Conclusions: In this instance, the two methods produce very different results. The occupancy estimate of 30 square feet per person is undoubtedly low for a furniture store even after the 50% adjustment. The 72 people-per-acre estimate using the parking requirement methodology is probably closer to being realistic. As part of the general plan consistency process, ALUCs and local jurisdictions should decide which method or combination of methods is to be used in reviewing development proposals.

Source: Caltrans, California Airport Land Use Planning Handbook, January 2002.

TABLE D-1
OCCUPANCY LEVELS – CALIFORNIA BUILDING CODE

Use	Minimum Square Feet per Occupant
1. Aircraft Hangars (no repair)	500
2. Auction Rooms	7
3. Assembly Areas, Concentrated Use Without Fixed Seats (auditoriums, churches, dance floors, lobby accessory to assembly occupancy, lodge rooms, reviewing stands, stadiums, waiting areas)	7
4. Assembly Areas, Less Concentrated Use (conference rooms, dining rooms, drinking establishments, exhibit rooms, gymnasiums, lounges, stages)	15
Gaming	11
5. Bowling Alley (assume no occupant load for bowling lanes)	4
6. Children's Homes and Homes for the Aged	80
7. Classrooms	20
8. Congregate Residences	200
9. Courtrooms	40
10. Dormitories	50
11. Dwellings	300
12. Exercising Rooms	50
13. Garage, Parking	200
14. Health-Care Facilities	80
Sleeping Rooms	120
Treatment Rooms	240
15. Hotels and Apartments	200
16. Kitchen - Commercial	200
17. Library Reading Room	50
Stack Areas	100
18. Locker Rooms	50
19. Malls	Varies
20. Manufacturing Areas	200
21. Mechanical Equipment Room	300
22. Nurseries for Children (Daycare)	35
23. Offices	100
24. School Shops and Vocational Rooms	50
25. Skating Rinks	50 on the skating area; 15 on the deck
26. Storage and Stock Rooms	300
27. Stores - Retail Sales Rooms	
Basements and Ground Floors	30
Upper Floors	60
28. Swimming Pools	50 for the pool area; 15 on the deck
29. Warehouses	500
30. All Others	100

Source: *California Building Code* (2001), Table 10-A.

TABLE D-2
OCCUPANCY TYPES – CALIFORNIA BUILDING CODE

Group and Division	CBC Section	Description of Occupancy
A-1	303.1.1	A building or portion of a building having an assembly room with an occupant load of 1,000 or more and a legitimate stage.
A-2		A building or portion of a building having an assembly room with an occupant load of less than 1,000 and a legitimate stage.
A-2.1		A building or portion of a building having an assembly room with an occupant load of 300 or more without a legitimate stage, including such buildings used for educational purposes and not classed as a Group E or Group B Occupancy.
A-3		A building or portion of a building having an assembly room with an occupant load of less than 300 without a legitimate stage, including such buildings used for educational purposes and not classed as a Group E or Group B Occupancy.
A-4		Stadiums, reviewing stands and amusement park structures not included within other Group A Occupancies.
B	304.1	A building or structure, or a portion thereof, for office, professional, or service-type transactions, including storage of records and accounts; eating establishments and drinking establishments with an occupant load of less than 50.
E-1	305.1	Any building used for educational purposes through the 12th grade by 50 or more persons for more than 12 hours per week or four hours in any one day.
E-2		Any building used for educational purposes through the 12th grade by less than 50 persons for more than 12 hours per week or four hours in any one day.
E-3		Any building or portion thereof used for day-care purposes for more than six persons.
F-1	306.1	Moderate-hazard factory and industrial occupancies include factory and industrial uses not classified in as Group F, Division 2 Occupancies.
F-2		Low-hazard factory and industrial occupancies include facilities producing noncombustible or nonexplosive materials that during finishing, packing or processing do not involve a significant fire hazard.
H-1	307.1	Occupancies with a quantity of material in the building in excess of those listed in Table 3-D that present a high explosion hazard as listed in Section 307.1.1.
H-2		Occupancies with a quantity of material in the building in excess of those listed in Table 3-D that present a moderate explosion hazard as listed in Section 307.1.1.
H-3		Occupancies with a quantity of material in the building in excess of those listed in Table 3-D that present a high fire or physical hazard as listed in Section 307.1.1.
H-4		Repair garages not classified as Group S, Division 3 Occupancies.
H-5		Aircraft repair hangars not classified as Group S, Division 5 Occupancies and heliports.
H-6	307.1 and 307.11	Semiconductor fabrication facilities and comparable research and development areas when the facilities in which the hazardous production materials are used, and the aggregate quantity of the material is in excess of those listed in Table 3-D or 3-E.
H-7	307.1	Occupancies having quantities of materials in excess of those listed in Table 3-E that are health hazards as listed in Section 307.1.1.
I-1.1	308.1	Nurseries for the full-time care of children under the age of six (each accommodating more than five children), hospitals, sanitariums, nursing homes with nonambulatory patients and similar buildings (each accommodating more than 5 patients [*for SFM*] six patients or children).
I-1.2		Health-care centers for ambulatory patients receiving outpatient medical care which may render the patient incapable of unassisted self-preservation (each tenant space accommodating more than five such patients).
I-2		Nursing homes for ambulatory patients, homes for children six years of age or older (each accommodating more than five persons [*for SMF*] six patients or children).
I-3		Mental hospitals, mental sanitariums, jails, prisons, reformatories and buildings where personal liberties of inmates are similarly restrained.
M	309.1	A building or structure, or a portion thereof, for the display and sale of merchandise, and involving stocks of goods, wares or merchandise, incidental to such purposes and accessible to the public.
R-1	310.1	Hotels and apartment houses, congregate residences (each accommodating more than 10 persons).
R-2.1		*Residential care facilities for the elderly (each accommodating more than six nonambulatory clients).*
R-2.2		*Residential care facilities for the elderly (each accommodating more than six ambulatory clients).*
R-2.1.1		*Residential care facilities for the elderly (each accommodating six or less nonambulatory clients).*
R-2.2.1		*Residential care facilities for the elderly (each accommodating six or less ambulatory clients).*
R-2.3		*Residential-based licensed facilities providing hospice care throughout, accommodating more than six bedridden clients.*
R-2.3.1		*Residential-based licensed facilities providing hospice care throughout, accommodating six or less bedridden clients.*
R-3		Dwellings, lodging houses, congregate residences (each accommodating 10 or fewer persons).
S-1	311.1	Moderate-hazard storage occupancies including buildings or portions of buildings used for storage of combustible materials not classified as Group S, Division 2 or Group H Occupancies.
S-2		Low-hazard storage occupancies including buildings or portions of buildings used for storage of noncombustible materials.
S-3		Repair garages where work is limited to exchange of parts and maintenance not requiring open flame or welding, and parking garages not classified as Group S, Division 4 Occupancies.
S-4		Open parking garages.
S-5		Aircraft hangars and helistops.
U-1	312.1	Private garages, carports, sheds and agricultural buildings.
U-2		Fences over 6 feet (1829 mm) high, tanks and towers.

Source: *California Building Code* (2001), Table 3-A

APPENDIX E

Sample Implementation Documents

The responsibility for implementation of the policies set forth in the compatibility plans adopted by airport land use commissions rests largely with the affected local jurisdictions. Implementation tools fall into the categories of notification and regulation. The state requires certain notification requirements effective January 1, 2004 (as a result of Assembly Bill 2776). Additional notification, in the form of a recorded deed notice, may also be appropriate. Regulation may take the form of individual property restrictions (avigation easements) or additional development controls in areas within the vicinity of an airport (an airport combining zone ordinance).

Required Notification—State law requires any person who intends to offer subdivided lands within California for sale or lease to file with the Department of Real Estate an application for a public report consisting of a notice of intention and a completed questionnaire. The notice shall include, for property within an AIA to include the following notice:

> NOTICE OF AIRPORT IN VICINITY
>
> This property is presently located in the vicinity of an airport, within what is known as an airport influence area. For that reason, the property may be subject to some of the annoyances or inconveniences associated with proximity to airport operations (for example: noise, vibration, or odors). Individual sensitivities to those annoyances can vary from person to person. You may wish to consider what airport annoyances, if any, are associated with the property before you complete your purchase and determine whether they are acceptable to you.

Recorded Deed Notice—Deed notices are a form of buyer awareness measure whose objective is to ensure that prospective buyers of airport area property, particularly residential property, are informed about the airport's impact on the property. Unlike easements, deed notices do not convey property rights from the property owner to the airport and do not restrict the height of objects. They only document the existence of certain conditions which affect the property—such as the proximity of the airport and common occurrence of aircraft overflights at or below the airport traffic pattern altitude. ALUCs may make recording of deed notices a requirement for project approval within portions of the airport influence area where avigation easements are not essential. Included in this Appendix is sample of a deed notice (from the California Airport Land Use Planning Handbook, 2002).

Avigation Easement—Avigation easements transfer certain property rights from the owner of the underlying property to the owner of an airport. ALUCs may require avigation easement dedication as a condition for approval of development on property subject to high noise levels or a need to restrict heights of structures and trees to less than what might ordinarily occur on the property. Also, airports may require avigation easements in conjunction with programs for noise insulation of existing structures in the airport vicinity. Included in this Appendix is a sample avigation easement (from the California Airport Land Use Planning Handbook, 2002).

Airport Combining Zone Ordinance—An additional type of implementation document available to local jurisdictions is an airport combining zone ordinance. Possible components for such an ordinance are described in Table E-1.

TABLE E-1
POSSIBLE AIRPORT COMBINING ZONE COMPONENTS

An airport compatibility combining zoning ordinance might include some or all of the following components:

- **Airspace Protection**—A combining district can establish restrictions on the height of buildings, antennas, trees, and other objects as necessary to protect the airspace needed for operation of the airport. These restrictions should be based upon the current version of Federal Aviation Regulations (FAR) Part 77, Objects Affecting Navigable Airspace, Subpart C. Additions or adjustment to take into account instrument approach (TERPS) surfaces should be made as necessary. Provisions prohibiting smoke, glare, bird attractions, and other hazards to flight should also be included.

- **FAA Notification Requirements**—Combining districts also can be used to ensure that project developers are informed about the need for compliance with the notification requirements of FAR Part 77. Subpart B of the regulations requires that the proponent of any project which exceeds a specified set of height criteria submit a Notice of Proposed Construction or Alteration (Form 7460-1) to the Federal Aviation Administration prior to commencement of construction. The height criteria associated with this notification requirement are lower than those spelled out in Part 77, Subpart C, which define airspace obstructions. The purpose of the notification is to determine if the proposed construction would constitute a potential hazard or obstruction to flight. Notification is not required for proposed structures that would be shielded by existing structures or by natural terrain of equal or greater height, where it is obvious that the proposal would not adversely affect air safety.

- **Maximum Densities/Intensities**—Airport noise and safety compatibility criteria are frequently expressed in terms of dwelling units per acre for residential uses and people per acre for other land uses. These standards can either be directly included in a combining zone or used to modify the underlying land use designations. For residential land uses, the correlation between the compatibility criteria and land use designations is direct. For other land uses, the method of calculating the intensity limitations needs to be defined. Alternatively, a matrix can be established indicating whether each specific type of land use is compatible with each compatibility zone. To be useful, the land use categories need to be more detailed than typically provided by general plan or zoning ordinance land use designations.

- **Open Areas for Emergency Landing of Aircraft**—In most circumstances in which an accident involving a small aircraft occurs near an airport, the aircraft is under control as it descends. When forced to make an off-airport emergency landing, pilots will usually attempt to do so in the most open area readily available. To enhance safety both for people on the ground and the occupants of aircraft, airport compatibility plans often contain criteria requiring a certain amount of open land near airports. These criteria are most effectively carried out by planning at the general or specific plan level, but may also need to be included in a combining district so that they will be applied to development of large parcels. Adequate open areas can often be provided by clustering of development on adjacent land.

TABLE E-1
POSSIBLE AIRPORT COMBINING ZONE COMPONENTS

An airport compatibility combining zoning ordinance might include some or all of the following components:

- **State Regulation of Obstructions**—State law prohibits anyone from constructing or altering a structure or permitting an object of natural growth to exceed the heights established by FAR Part 77, Subpart C, unless the FAA has determined the object would not or does not constitute a hazard to air navigation (Public Utilities Code, Section 21659). Additionally, a permit from the Department of Transportation is required for any structure taller than 500 feet above the ground unless the height is reviewed and approved by the Federal Communications Commission or the FAA (Section 21656).

- **Designation of High Noise-Impact Areas**—California state statutes require that multi-family residential structures in high-noise exposure areas be constructed so as to limit the interior noise to a Community Noise Equivalent Level of no more than 45 dB. A combining district could be used to indicate the locations where special construction techniques may be necessary in order to ensure compliance with this requirement. The combining district also could extend this criterion to single-family dwellings.

- **Areas of Special Compatibility Concern**—A significant drawback of standard general plan and zoning ordinance land use designations is that they can be changed. Uses that are currently compatible are not assured of staying that way in the future. Designation of areas of special compatibility concern would serve as a reminder that airport impacts should be carefully considered in any decision to change the existing land use designation. [A legal consideration which supports the value of this concept is that down-zoning of a property to a less intensive use is becoming more difficult. It is much better not to have inappropriately up-zoned the property in the first place.]

- **Real Estate Disclosure Policies**—The geographic extent and specific language of recommended real estate disclosure statements can be described in an airport combining zone ordinance.

Sample Avigation Easement

This indenture made this _____ day of _____, 20___, between_____ herein after referred to as Grantor, and the [Insert County or City name], a political subdivision in the State of California, hereinafter referred to as Grantee. The Grantor, for good and valuable consideration, the receipt and sufficiency of which are hereby acknowledged, does hereby grant to the Grantee, its successors and assigns, a perpetual and assignable easement over the following described parcel of land in which the Grantor holds a fee simple estate. The property which is subject to this easement is depicted as _____ on “Exhibit A” attached and is more particularly described as follows:

[Insert legal description of real property] The easement applies to the Airspace above an imaginary plane over the real property. The plane is described as follows:

The imaginary plane above the hereinbefore described real property, as such plane is defined by Part 77 of the Federal Aviation Regulations, and consists of a plane [describe approach, transition, or horizontal surface]; the elevation of said plane being based upon the _____ Airport official runway end elevation of _____ feet Above Mean Sea Level (AMSL), as determined by [Insert name and Date of Survey or Airport Layout Plan that determines the elevation] the approximate dimensions of which said plane are described and shown on Exhibit A attached hereto and incorporated herein by reference.

The aforesaid easement and right-of-way includes, but is not limited to:

1) For the use and benefit of the public, the easement and continuing right to fly, or cause or permit the flight by any and all persons, or any aircraft, of any and all kinds now or hereafter known, in, through, across, or about any portion of the Airspace hereinabove described; and

2) The easement and right to cause or create, or permit or allow to be caused or created within all space above the existing surface of the hereinabove described real property and any and all Airspace laterally adjacent to said real property, such noise, vibration, currents and other effects of air, illumination, and fuel consumption as may be inherent in, or may arise or occur from or during the operation of aircraft of any and all kinds, now or hereafter known or used, for navigation of or flight in air; and

3) A continuing right to clear and keep clear from the Airspace any portions of buildings, structures, or improvements of any kinds, and of trees or other objects, including the right to remove or demolish those portions of such buildings, structures, improvements, trees, or other things which extend into or above said Airspace, and the right to cut to the ground level and remove, any trees which extend into or above the Airspace; and

4) The right to mark and light, or cause or require to be marked or lighted, as obstructions to air navigation, any and all buildings, structures, or other improvements, and trees or other objects, which extend into or above the Airspace; and

5) The right of ingress to, passage within, and egress from the hereinabove described real property, for the purposes described in subparagraphs (3) and (4) above at reasonable times and after reasonable notice.

For and on behalf of itself, its successors and assigns, the Grantor hereby covenants with the [Insert County or City name], for the direct benefit of the real property constituting the _____ Airport hereinafter described, that neither the Grantor, nor its successors in interest or assigns will construct, install, erect, place or grow in or upon the hereinabove described real property, nor will they permit to allow, any building structure, improvement, tree or other object which extends into or above the Airspace, or which constitutes an obstruction to air navigation, or which obstructs or interferes with the use of the easement and rights-of-way herein granted.

The easements and rights-of-way herein granted shall be deemed both appurtenant to and for the direct benefit of that real property which constitutes the _____ Airport, in the [Insert County or City name], State of California; and shall further be deemed in gross, being conveyed to the Grantee for the benefit of the Grantee and any and all members of the general public who may use said easement or right-of-way, in landing at, taking off from or operating such aircraft in or about the _____ Airport, or in otherwise flying through said Airspace.

Grantor, together with its successors in interest and assigns, hereby waives its right to legal action against Grantee, its successors, or assigns for monetary damages or other redress due to impacts, as described in Paragraph (2) of the granted rights of easement, associated with aircraft operations in

the air or on the ground at the airport, including future increases in the volume or changes in location of said operations. Furthermore, Grantor, its successors, and assigns shall have no duty to avoid or mitigate such damages through physical modification of airport facilities or establishment or modification of aircraft operational procedures or restrictions. However, this waiver shall not apply if the airport role or character of its usage (as identified in an adopted airport master plan, for example) changes in a fundamental manner which could not reasonably have been anticipated at the time of the granting of this easement and which results in a substantial increase in the impacts associated with aircraft operations. Also, this grant of easement shall not operate to deprive the Grantor, its successors or assigns, of any rights which may from time to time have against any air carrier or private operator for negligent or unlawful operation of aircraft.

These covenants and agreements run with the land and are binding upon the heirs, administrators, executors, successors and assigns of the Grantor, and, for the purpose of this instrument, the real property firstly hereinabove described is the servient tenement and said _____ Airport is the dominant tenement.

DATED: _____
STATE OF:
COUNTY OF:

On _____, before me, the undersigned, a Notary Public in and for said County and State, personally appeared _____, and _____ known to me to be the persons whose names are subscribed to the within instrument and acknowledged that they executed the same.

WITNESS my hand and official seal.

_____
Notary Public

Sample Deed Notice

A statement similar to the following should be included on the deed for any real property subject to the deed notice requirements set forth in the [Insert ALUC name] *Airport Land Use Compatibility Plan*. Such notice should be recorded by the county of [Insert County name]. Also, this deed notice should be included on any parcel map, tentative map, or final map for subdivision approval.

The *Alameda County Airport Land Use Compatibility Plan* and [Insert County/City name] Ordinance (Ordinance No. _____) identify a [Insert Airport name] Airport Influence Area. Properties within this area are routinely subject to overflights by aircraft using this public-use airport and, as a result, residents may experience inconvenience, annoyance, or discomfort arising from the noise of such operations. State law (Public Utilities Code Section 21670 et seq.) establishes the importance of public-use airports to protection of the public interest of the people

of the state of California. Residents of property near such airports should therefore be prepared to accept the inconvenience, annoyance, or discomfort from normal aircraft operations. Residents also should be aware that the current volume of aircraft activity may increase in the future in response to Alameda County population and economic growth. Any subsequent deed conveying this parcel or subdivisions thereof shall contain a statement in substantially this form.

Sample Overflight Notification

This *Overflight Notificaiton* concerns the real property situated in the City of _____, County of Alameda, State of California, described as _____ [APN]_____.

This *Overflight Notification* provides notification of the condition of the above described property in recognition of, and in compliance with, CALIFORNIA BUSINESS & PROFESSIONS CODE Section 11010 and CALIFORNIA CIVIL CODE Sections 1102.6, 1103.4, and 1353, effective January 1, 2004, and related state and local regulations and consistent with policies of the Airport Land Use Commission for Alameda County for overflight notification provided in the Livermore Municipal Airport Land Use Compatibility Plan.

NOTICE OF AIRPORT IN VICINITY: *This property is presently located in the vicinity of an airport, within what is known as an airport influence area. For that reason, the property may be subject to some of the annoyances or inconveniences associated with proximity to airport operations (for example: noise, vibration, or odors). Individual sensitivities to those annoyances can vary from person to person. You may wish to consider what airport annoyances, if any, are associated with the property before you complete your purchase and determine whether they are acceptable to you.*

The Federal Aviation Administration (FAA) has regulatory authority over the operation of aircraft in flight and on the runway and taxiway surfaces at Livermore Municipal Airport. The FAA is, therefore, exclusively responsible for airspace and air traffic management, including ensuring the safe and efficient use of navigable airspace, developing air traffic rules, assigning the use of airspace and controlling air traffic. Please contact the FAA for more detailed information regarding overflight and airspace protection issues associated with the operation of aircraft.

The Airport Operator, The City of Livermore, maintains information regarding hours of operation and other relevant information regarding airport operations. Please contact your local airport operator for more detailed information regarding airport-specific operational issues including hours of operation.

This *Overflight Notification* shall run with the Property and shall be binding upon all parties having or acquiring any right, title, or interest in the Property.

Effective Date: _____, 20__

APPENDIX F
Consistency Checklist

Introduction

One of the fundamental responsibilities assigned to ALUCs by the Aeronautics Act is to review particular types of local actions for compliance with the criteria and policies set forth in the commissions' adopted compatibility plans. The law specifies that local jurisdictions must refer certain actions to the ALUC for review. Actions included in this category are proposed adoption or amendment of general plans, specific plans, zoning ordinances, and building regulations affecting land within an AIA. Also required to be submitted for ALUC review are several types of airport and heliport development plans. Referral of other local actions – primarily individual development projects – is required in some instances, but voluntary in others.

The following checklist is intended to assist local jurisdictions with modifications necessary to make their general plans and other local policies consistent with the ALUC's compatibility plan. It is also designed to facilitate ALUC reviews of these local plans and policies. For more information on the review process of local land use actions, please refer to chapters 4 and 5 of the *California Airport Land Use Planning Handbook* (Caltrans, 2002).

Consistency Checklist

General and Specific Plan Documents

The following items typically appear directly in a general or specific plan. Amendment of these types of documents will be required if there are any conflicts with the ALUCP.

Land Use Map – No direct conflicts should exist between proposed new land uses indicated on a general plan land use map and the ALUC land use compatibility criteria.

- □ Residential densities (dwelling units per acre) should not exceed the set limits. Differences between gross and net densities and the potential for secondary dwellings on single parcels may need to be taken into account.
- □ Proposed nonresidential development needs to be assessed with respect to applicable intensity limits.
- □ No new land uses of a type listed as specifically prohibited should be shown within affected areas.

Noise Element – General plan noise elements typically include criteria indicating the maximum noise exposure for which residential development is normally acceptable. Note, however, that a general plan may establish a different limit with respect to aviation-related noise than for noise from other sources (this may be appropriate in that aviation-related noise is often judged to be more objectionable than other types of equally loud noises).

- □ This limit must be made consistent with the equivalent compatibility plan criteria.

Zoning or Other Policy Documents

The following items need to be reflected either in the general plan or in a separate policy document such as a combining zone ordinance. If a separate policy document is adopted, modification of the general plan to achieve consistency with the compatibility plan may not be required. Modifications would normally be needed only to eliminate any conflicting language which may be present and to make reference to the separate policy document.

- □ **Secondary Dwellings** – detached secondary dwellings on the same parcel should be counted as additional dwellings for the purposes of density calculations. This factor needs to be reflected in local policies either by adjusting the maximum allowable densities or by prohibiting secondary dwellings where their presence would conflict with the compatibility criteria.
- □ **Intensity Limitations on Nonresidential Uses** – Local policies must be established to limit the usage intensities of commercial, industrial, and other nonresidential land uses. This can be done by duplication of the performance-oriented criteria – specifically, the number of people per acre – indicated in the compatibility plan. Alternatively, local jurisdictions may create a detailed list of land uses which are allowable and/or not allowable within each compatibility zone. For certain land uses, such a list may need to

include limits on building sizes, floor area ratios, habitable floors, and/or other design parameters which are equivalent to the usage intensity criteria.

- □ **Identification of Prohibited Uses** – Compatibility plans may prohibit day care centers, hospitals, and certain other uses within much of an airport's influence area. The facilities often are permitted or conditionally permitted uses within many commercial or industrial land use designations. Policies need to be established which preclude these uses in accordance with the compatibility criteria.

- □ **Open Land Requirements** – Compatibility plan requirements, if any, for assuring that a minimum amount of open land is preserved in the airport vicinity must be reflected in local policies. Normally, the locations which are intended to be maintained as open land would be identified on a map with the total acreage within each compatibility zone indicated. If some of the area included as open land is private property, then policies must be established which assure that the open land will continue to exist as the property develops. Policies specifying the required characteristics of eligible open land also must be established.

- □ **Infill development** – If a compatibility plan contains infill policies and a jurisdiction wishes to take advantage of them, the lands which meet the qualifications must be shown on a map.

- □ **Height Limitations and Other Hazards to Flight** – To protect the airport airspace, limitations must be set on the height of structures and other objects near airports. These limitations are to be based upon Part 77 of the Federal Aviation Regulations, but may include exceptions for objects on high terrain if provided for in the ALUCP. Restrictions also must be established on other land use characteristics which can cause hazards to flight (specifically, visual or electronic interference with navigation and uses which attracted hazardous wildlife). Note that many jurisdictions have already adopted an airport-related hazard and height limit zoning ordinance which, if up to date, will satisfy this consistency requirement.

- □ **Noise Insulation Requirements** – Some compatibility plans call for certain buildings proposed for construction within high noise-impact areas to demonstrate that they will contain sufficient sound insulation to reduce aircraft-related noise to an acceptable level. These criteria apply to new residences, schools, and certain other buildings containing noise-sensitive uses. Local policies must include parallel criteria.

- □ **Buyer Awareness Measures** – As a condition for approval of development within certain compatibility zones, some compatibility plans require either dedication of an avigation easement to the airport proprietor or place on deeds of a notice regarding airport impacts. If so, local jurisdiction policies must contain similar requirements. Compatibility plans also may encourage, but should not require, local jurisdictions to adopt a policy stating that airport proximity and the potential for aircraft overflights be disclosed as part of real estate transactions regarding property in the airport influence area.

- □ **Nonconforming Uses and Reconstruction** – Local jurisdiction policies regarding nonconforming uses and reconstruction must be equivalent to or more restrictive than those in the ALUCP, if any.

Review Procedures

In addition to incorporation of ALUC compatibility criteria, local jurisdiction implementing documents must specify the manner in which development proposals will be reviewed for consistency with the compatibility criteria.

- □ **Actions Always Required to be Submitted for ALUC Review** – State law specifies which types of development actions must be submitted for ALUC review. Local policies should either list these actions or, at a minimum, not the jurisdiction's intent to comply with the state statute.
- □ **Other Land Use Actions Potentially Subject to ALUC Review** – In addition to the above actions, the compatibility plan may identify certain major land use actions for which referral to the ALUC is dependent upon agreement between the jurisdiction and the ALUC. If the jurisdiction fully complies with all of the items in this general plan consistency checklist or has taken the necessary steps to overrule the ALUC, then referral of the additional actions is voluntary. On the other hand, a jurisdiction may elect not to incorporate all of the necessary compatibility criteria and review procedures into its own policies. In this case, referral of major land use actions to the ALUC is mandatory. Local policies should indicate the jurisdiction's intentions in this regard.
- □ **Process for Compatibility Reviews by Local Jurisdictions** – If a jurisdiction choose to submit only the mandatory actions for ALUC review, then it must establish a policy indicating the procedures which will be used to assure that airport compatibility criteria are addressed during review of other projects. Possibilities include: a standard review procedure checklist which includes reference to compatibility criteria; use of a geographic information system to identify all parcels within the airport influence area; etc.
- □ **Variance Procedures** – Local procedures for granting of variances to the zoning ordinance must make certain that any such variances do not result in a conflict with the compatibility criteria. Any variance which involves issues of noise, safety, airspace protection, or overflight compatibility as addressed in the compatibility plan must be referred to the ALUC for review.
- □ **Enforcement** – Policies must be established to assure compliance with compatibility criteria during the lifetime of the development. Enforcement procedures are especially necessary with regard to limitations on usage intensities and the heights of objects. An airport combining district zoning ordinance is one means of implementing enforcement requirements.

APPENDIX G
Heliport Design

As described in Table 2-1 "Heliports in Alameda County", one public- and several private-use airports operate to support private, business, and medical uses. Proposals to enhance, modify, or deactivate these facilities is subject to ALUC review.

FAA Advisory Circular (AC) 150/5390-2B, "Heliport Design," provides recommendations for heliport design and describes the federal requirements associated with heliport development. The AC applies to any proposal to construct, activate, or deactivate a heliport. Although the AC only constitutes a regulation when Federal funds are used, Alameda County encourages those with heliport proposals to implement the guidance set forth in the AC to the greatest extent practicable.

FAA AC 150/5390-2B provides detailed data concerning heliport and helipad design, such as:

- Physical, technical, and public interest matters that should be considered in the planning and establishment of a heliport;
- Descriptions pertaining to appropriate or optimum locations for heliports;
- Terminology and pertinent terms associated with heliports;
- Design standards relevant to developing heliport facilities that support general aviation, transport, and hospitals, including diagrams;
- Gradient and pavement design; and
- Dimensional data, markings, etc.

FAA recommends that the standards presented in the AC should be used in planning and designing improvements to existing facilities or whenever a significant expansion or reconstruction project is undertaken. The complete AC is available at www.faa.gov in several files that can be downloaded upon request. The cover memorandum describing the AC and the Table of Contents are reproduced here for convenience, as the AC comprises more than 200 pages and is likely to be revised during the lifetime of this Airport Land Use Compatibility Plan. The most recent version of the AC is available from the FAA website at: www.faa.gov.

This page left intentionally blank.

U.S. Department
of Transportation

Federal Aviation
Administration

Advisory Circular

Subject: HELIPORT DESIGN

Date: 09/30/04
Initiated by: AAS-100

AC No: 150/5390-2B
Change:

1. PURPOSE. This advisory circular (AC) provides recommendations for heliport design and describes acceptable requirements to develop a heliport. This AC applies to anyone who is proposing to construct, activate or deactivate a heliport.

2. APPLICABILITY: This AC is not mandatory and does not constitute a regulation except when Federal funds are specifically dedicated for heliport construction.

3. EFFECTIVE DATE:

4. CANCELLATION. AC 150/5390-2A, *Heliport Design*, dated January 20, 1994, is canceled.

5. EXECUTIVE SUMMARY. The modern helicopter is one of the most versatile transportation vehicles known to man. Typically, a heliport is substantially smaller than an airport providing comparable services. The helicopter has the capability of providing a wide variety of important services to any community that integrates this aircraft into its local transportation system.

a. Service. In addition to their service in the transportation of people, helicopters have proven to be useful to their communities in the following ways:

(1). Disaster Relief. Natural disasters often result in the breakdown of ground transportation systems. Helicopters are able both to bring in response teams and supplies and to evacuate injured people during the critical period before ground transportation is restored.

(2). Air Ambulance Services. For an injured or critically ill person, time is life. Helicopters can provide high-speed, point-to-point transportation without being constrained by the limitations of the ground infrastructure.

(3). Police Services. Many municipalities consider their police services helicopters vital force multipliers in carrying out search and rescue, chase, and surveillance.

(4). Moving High-Value Assets. High-value or time-sensitive cargo, such as canceled checks, and people, including the President of the United States, frequently travel on helicopters because this mode of transportation is fast and flexible. Companies use helicopters as an invaluable part of an in-house transportation system to connect the office with various plants, job sites, and the local airport. Utility companies use helicopters to construct and inspect high-voltage electrical lines and to monitor underground gas transmission lines. The petroleum industry uses helicopters to support exploration and production operations. Newspapers and radio/TV stations use helicopters for onsite news gathering, taking photos, and airborne reporting of rush hour traffic conditions.

b. Facilities. The most effective way for a community to realize the benefits of helicopter services is by developing or permitting the development of places where helicopters can land and take off. While heliports can be large and elaborate, most are not. The basic elements of a heliport are clear approach/ departure paths, a clear area

for ground maneuvers, and a windsock. This minimal facility may be adequate as a private use heliport, and may even suffice as the initial phase in the development of a public use heliport capable of serving the general aviation segment of the helicopter community.

c. Planning. While the heliport itself may be simple, the planning and organization required to properly put one into place can be intimidating. To help make the process easier, the Federal Aviation Administration (FAA) has published this AC. This document describes physical, technical, and public interest matters that should be considered in the planning and establishment of a heliport. While this AC is a technical document intended to help engineers, architects, and city planners' design, locate, and build the most effective heliport, it can be used by anyone considering the construction of a heliport.

d. Location. The optimum location for a heliport is in close proximity to the desired origination and/or destination of the potential users. Industrial, commercial, and business operations in urban locations are demand generators for helicopter services, even though they often compete for the limited ground space available. A site permitting the shared aeronautical and commercial usage is a viable alternative to non-aeronautical use alone. Heliport sites may be adjacent to a river or a lake, a railroad, a freeway, or a highway, all of which offer the potential for multi- functional land usage. These locations also have the advantage of relatively unobstructed airspace, which can be further protected from unwanted encroachment by properly enacted zoning. As vertical flight transportation becomes more prevalent, requirements for scheduled "airline type" passenger services will necessitate the development of an instrument procedure to permit "all-weather" service.

e. AC Organization. This AC is structured to provide communities and persons intending to develop a heliport, or become involved in regulating helicopter facilities, with general guidance on heliport requirements. The AC is organized with separate chapters covering general aviation heliports, transport heliports, and hospital heliports based on the functional role of the heliport.

(1). A heliport proponent should be familiar with the terminology used in this specialized field. Chapter 1 defines pertinent terms used in the industry and identifies actions common to developing a heliport.

(2). General aviation heliports are normally privately owned although they can be publicly owned. Design standards relevant to developing a general aviation heliport are found in Chapter 2.

(3). Transport heliports are developed to provide the community with a full range of vertical flight services including scheduled service by air carriers (airlines) using helicopters. When the heliport serves any scheduled or unscheduled passenger operation of an air carrier that is conducted with an aircraft having a seating capacity of more than 30 passengers, the heliport is required to be certificated by the FAA in accordance with 14 Code of Federal Regulations (CFR) Part 139, Certification and Operations: Land Airports Serving Certain Air Carriers. In any event, a transport heliport would also accommodate corporate users and local air taxi operators. This broad spectrum of activities frequently requires a more extensive airside and landside infrastructure with the potential capability to operate in instrument meteorological conditions. Not withstanding these requirements, a community's investment in a heliport may be substantially less than the investment required for an airport providing comparable services. Design standards relevant to developing a transport heliport are found in Chapter 3.

(4). Hospital heliports are treated as special cases of general aviation facilities providing a unique public service. They are normally located in close proximity to the hospital emergency room or a medical facility. Design recommendations relevant to developing a hospital heliport are found in Chapter 4.

(5). When there are a significant number of helicopter operations on an airport, it may be prudent to consider developing separate facilities specifically for helicopter use. Chapter 5 addresses helicopter facilities on airports.

(6). With the introduction of the global positioning system (GPS), it is now practical for heliports to have instrument approaches. Good planning suggests that heliport proponents should plan for the eventual development of instrument approaches to their heliports. Chapters 6 and 7 contain recommendations to be considered in contemplating future instrument operations at a heliport. It is wise to consider these issues during site selection and design.

(7). Chapter 8 addresses heliport gradients and pavement design issues.

(8). The appendices provide helicopter dimensional data, addresses of aviation organizations, form and proportions of certain heliport markings, and acronyms.

6. APPLICATION. The recommendations and standards in this AC are for planning and designing civil heliports. To the extent that it is feasible and practical to do so, the standards in this AC should be used in planning and designing improvements to an existing facility when significant expansion or reconstruction is undertaken. Conformity with these standards is a prerequisite to Federal grant-in-aid assistance. Modification to a heliport design standard related to new construction, expansion, reconstruction, or upgrade on a heliport that received Federal aid requires FAA approval. The request for modification should show that the modification will provide an acceptable level of safety, economy, durability, and workmanship. The recommendations and standards in this AC are not intended to be sufficient to design an instrument approach procedure.

NOTE: *If tiltrotor operations are contemplated, criteria in AC 150/5390-3, Vertiport Design are applicable.*

7. METRIC UNITS. To promote an orderly transition to metric units, this AC includes both English and metric dimensions. The metric conversions may not be exact equivalents, and until there is an official changeover to the metric system, the English dimensions will govern.

DAVID L. BENNETT
Director of Airport Safety and Standards

This page left intentionally blank.

APPENDIX H
Airport Protection Area

The Airport Land Use Commission of Alameda County
Hayward, California

Resolution 93-01 – At a meeting held January 13, 1993

Introduced by Commissioner Maestas
Seconded by Commissioner Stone

WHEREAS the Airport Land Use Commission of Alameda County did receive a request by the City of Livermore for an amendment to the Alameda County Airport Land Use Policy Plan to incorporate policies and standards to create an Airport Protection Area (APA) around Livermore Municipal Airport, as set forth in City of Livermore Resolution 192-91 (adopted June 10, 1991); and

WHEREAS this Commission did hold a hearing on said proposed amendment on the Seventeenth day of November, 1992, in the County of Alameda Public Works Building, Auditorium, 399 Elmhurst Street, Hayward, California; and

WHEREAS said public hearing was continued to the thirteenth day of January, 1993; and

WHEREAS notice of this public hearing was given as required by law; and

WHEREAS Livermore's objective for amending the Alameda County Airport Land Use Policy Plan to create an Airport Protection Area around the Livermore Municipal Airport is to protect the airport from possible closure or curtailment of operations due to the encroachment of incompatible land uses, i.e., noise-sensitive residential uses, near the airport or under the flight pattern for the airport; and

WHEREAS the Livermore Municipal Airport serves as an important flight training facility in the Bay Area because its airspace is not as restricted as that found at other Bay Area airports, and the area around the airport is largely undeveloped or devoted to land uses compatible with aircraft operations; and

WHEREAS the Livermore Municipal Airport represents a significant financial investment in land and facilities by the federal government and the City of Livermore, with a current estimated replacement value of 104 million dollars; and

WHEREAS the conditions that make Livermore Municipal Airport a vital resource in the Bay Area cannot be replicated elsewhere within Alameda County; and

WHEREAS the City of Livermore cites the experience of Reid-Hillview Airport in San Jose and Hayward Air Terminal in Hayward, both of which have been threatened with closures or restrictions on aircraft due to incompatible land uses locating close to the airports; and

WHEREAS Airport Land Use Commissions (ALUCs) were established by state law to promote orderly development and expansion of airports, and to protect the health, safety, and welfare of the public by the adoption of land use measures that minimize the public's exposure to excessive noise and safety hazards within areas around public airports provided that these areas are not already devoted to incompatible uses; and

WHEREAS the APA would protect an airport for continued operations by placing restrictions on residential and other noise-sensitive land uses while minimizing the public's exposure to noise and safety impacts from aircraft in the airport traffic pattern, and adoption of an APA is consistent with the objectives which prompted the establishment of ALUCs statewide; and

WHEREAS the ALUC *Airport Land Use Policy Plan* allows this Commission to consider factors other than specific CNEL contours when establishing noise impact zone boundaries; and

WHEREAS noise levels around the Livermore Municipal Airport during peak operating periods will increase in the traffic pattern area due to increases in the number of aircraft operations per hour, and therefore this Commission finds that it is appropriate to design an APA to account for both peak period noise levels and CNEL, rather than CNEL alone; and

WHEREAS the City of Livermore's proposed APA was reviewed in accordance with the provisions of the California Environmental Quality Act and an Initial Study was prepared which determined that adoption of an APA around Livermore Municipal Airport would not result in any significant environmental impacts, since (1) creation of an APA would not result in a physical change to the existing environment because the APA would not cause something to be built but instead only exclude certain uses; and (2) CEQA requires that a project be evaluated to determine whether it would conflict with an adopted plan policies, and while much of the undeveloped land within the boundaries of the APA is subject to ongoing planning efforts, policies proposed for these lands have not yet been adopted; and

WHEREAS a Draft Negative Declaration was circulated for public review and comment;

WHEREAS this Commission considered all comments offered by the public in response to the draft Negative Declaration, and determined that the comments did not raise any issue which would require further analysis under CEQA;

NOW THEREFORE

BE IT RESOLVED that this Commission adopts a Negative Declaration and amends Chapters II and III of the Alameda County Airport Land Use Policy Plan to incorporate policies and standards to create an Airport Protection Area around Livermore Municipal Airport, as described in Exhibit A and shown in Exhibit B.

ADOPTED BY THE FOLLOWING VOTE:

AYES:	Maestas, Morris for Westgard, Morgan for Brown, Roth for Withrow, Stone, Welch, Foster
NOES:	None
ABSENT:	None
EXCUSED:	None
ABSTAINED:	None

ADOLPH MARTINELLI, ADMINISTRATIVE OFFICER
ALAMEDA COUNTY AIRPORT LAND USE COMMISSION

EXHIBIT A

THE AIRPORT PROTECTION AREA AMENDMENT TO THE ALUC *LAND USE POLICY PLAN*

Chapter II of the ALUC *Land Use Policy Plan* outlines the standards and policies that apply to airports in the County. Standards and policies are tailored to the conditions unique to each airport. The City of Livermore proposes that Chapters II and III of the *Land Use Policy Plan* be amended to include policies and standards that would provide for an APA at Livermore Municipal Airport only. In addition, the plan amendment would enable the designation of APAs around other airports in Alameda County, but would not specify any policies or standards (e.g., dimensions) which would apply to the County's other airports. Any future proposal for an APA around another airport in Alameda County would have to include site-specific standards and would have to be fully evaluated as a separate amendment to the *Land Use Policy Plan.*

The proposed changes to Chapters II and III read as follows:

Chapter II: POLICY AND STANDARDS

E. ALUC AIRPORT PROTECTION AREA (Insert between D. NOISE IMPACT ZONES and E. EXCEPTIONS TO ALUC LAND USE POLICIES)

Airport Protection Areas are established to prohibit new residential land use designations, or the intensification of existing residential land use designations, within the Airport Protection Area. The purpose is to forestall the complaints and adverse impacts on the health, safety and welfare of future citizens that will otherwise reside in the protection areas. Such complaints typically result from the extended daily exposure of residential land uses close to airports because they have a mix of passive, leisure, recreational and labor activities both in and out of doors. As outlined, the Airport Protection Area will eliminate complaints from persons that would otherwise reside in those areas and thus will minimize pressures to limit airport operations which are needed to serve the citizens in the airport service area.

Airport Protection Area Boundaries

The ALUC may adopt an Airport Protection Area as shown in the maps for each airport in Chapter III. The boundaries of the Airport Protection Area are generally located in all direction from the runways. The protected areas will normally include all space that will be affected by the largest extent of the traffic patterns. The dimensions of the Protection Area will depend on the conditions at each individual airport. The size and shape of the protection areas may be set to encompass those areas where it is anticipated that residential developments would result in significant complaints about noise and safety from future citizens that would otherwise reside there.

Airport Protection Area Policies

New residential land use designations, or the intensification of existing residential land use, shall be prohibited within the Airport Protection Area as shown in Map XXIII-A [See figure 2 of this Initial Study]. *Land uses other than residential may be allowed within the Airport Protection Areas that are consistent with other ALUC zone and area designations in the ALUC policy plan.*

Chapter III: AIRPORT LAND USE PLANS

D. LIVERMORE MUNICIPAL AIRPORT

Airport Protection Area [Insert between Noise Impact Zone and Background Information: Livermore Municipal Airport.]

The adopted Airport Protection Area boundaries at the Livermore Municipal Airport are as shown on Map XXIII-A [see Figure 2 of this Initial Study] *and are as follows:*

North Boundary:	*Running generally east to west, parallel to and north a perpendicular distance of 5000 feet from Runway 25R-7L.*
South Boundary:	*Running generally east to west, parallel to and south a perpendicular distance of 5000 feet from Runway 25L-7R.*
East Boundary:	*Running generally north to south, perpendicular to and 5000 feet east from the east end of Runway 25R-7L.*
West Boundary:	*Running generally north to south, perpendicular to and 7100 feet west from the west end of Runway 7L-25R.*

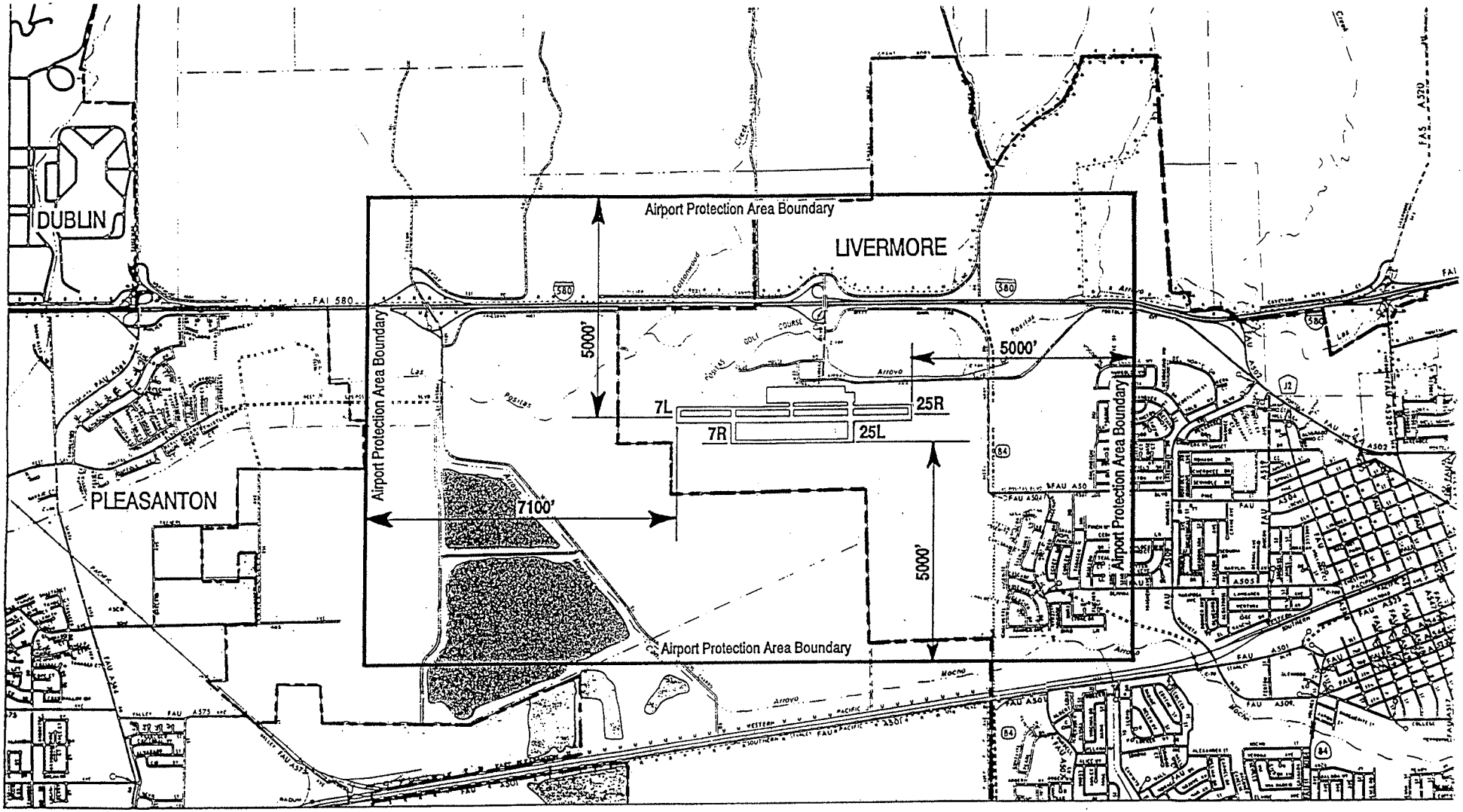

AIRPORT PROTECTION AREA
Livermore Municipal Airport
Adopted January 13, 1993

ALAMEDA COUNTY AIRPORT LAND USE COMMISSIC
ALAMEDA COUNTY PLANNING DEPARTMENT

APPENDIX I

Glossary

Air carrier: An operator that:

1. performs at least five round trips per week between two or more points and publishes flight schedules which specify the times, days of the week and places between which such flights are performed; or

2. transport mail by air pursuant to a current contract with the United States Postal Service.

Air carriers are certified in accordance with Federal Aviation Regulations (FAR) Parts 121 and 127.

Air charter: An air carrier certified in accordance with FAR Part 135 and authorized to provide, on demand, public transportation of persons and property by aircraft. Air charters generally operate small aircraft "for hire" for specific trips.

Air taxi: See air charter.

Air traffic control: A term used to denote a number of different types of facilities which are operated by or under the auspices of the Federal Aviation Administration and which provide informational, navigational, and collision avoidance services to aircraft in flight. Air traffic control towers and air route traffic control centers are elements of the air traffic control system.

Air traffic control tower (ATCT) ("tower"): A facility located within the physical boundaries of certain airports and consisting of a tower which provides visual and/or radar tracking, ground-to-air radio communications, traffic management, and limited informational, navigational, and separation services to aircraft operating in the immediate vicinity of an airport.

Air route traffic control center (ARTCC): A facility which provides radar tracking and informational, navigational, and separation services to aircraft operating beyond the immediate vicinity of an airport.

Airport Operation: A take off or a landing.

Angle of descent: The angle, with respect to a horizontal plane, of the flight path of an aircraft descending from a higher altitude to a lower altitude (usually expressed in degrees or in feet per nautical mile). Also referred to as **descent slope**.

Approach angle: The angle, with respect to a horizontal plane, of the flight path of an aircraft descending to land at an airport (usually expressed in degrees or in feet per nautical mile). Also referred to as **approach slope**.

Approach lighting system (ALS): An airport lighting system which, by means of a standardized array of lights on the ground provides visual cues which enable pilots or aircraft approaching the runway in conditions of darkness or poor visibility, to align the flight path of the aircraft with the extended centerline of the runway.

Banks: As employed in the Land Use Matrix and other sections of this ALUP, the term "banks" shall encompass any land use whereby some or all of the financial services customarily provided by banking institutions are offered to the general public. Examples include traditional banks, savings and loan associations, and credit unions. The provision of banking services at a site, which is predominantly devoted to a compatible use (e.g., in-store supermarket bank branches, automated teller machines), however, shall not be considered as banks in the context of this ALUP.

Base leg: A segment of the standard airport traffic pattern which extends at right angles from the extended runway centerline at some distance from the approach end of the runway. The base leg extends from the downwind leg of the traffic pattern to the final approach course (extended runway centerline) and is flown in the direction toward the runway centerline. The altitude of aircraft flying the base leg is usually between 1000 and 400 feet above ground level.

Religious Facilities: As employed in the Land Use Matrix and other sections of this ALUP, the term "churches" shall denote any land use devoted exclusively or primarily to religious worship. Classrooms and/or meeting rooms may be included as part of a church if sufficient conditions are placed upon the development to ensure that such facilities will be utilized only for religious instruction or church-related meetings and that their use for such purposes will remain subsidiary to the primary activity of religious worship. In the absence of such conditions, classroom facilities which would be suitable for regular religious or non-religious education of students will be considered a school.

Circle-to-Land Procedure: A series of standardized aerial procedures which enable aircraft which have completed an instrument approach intended to culminate in a landing on a specified runway to maneuver for landing on a different runway than specified in the basic instrument approach while maintaining visual contact with the airport.

Climb gradient: The angle, with respect to a horizontal plane, of the flight path of an aircraft ascending from a lower altitude to a higher altitude (usually expressed in feet per nautical mile).

Closed traffic: An airborne maneuver by which an aircraft takes off from and lands at an airport without leaving the immediate airport vicinity (usually performed as a flight training or practice maneuver) or the airport traffic pattern flown by such an aircraft.

Community noise equivalent level (CNEL): A measure, in decibels, of the cumulative noise exposure at a given site. The CNEL mathematically increases the significance of noise events occurring during evening and nighttime hours, in response to the widely-held assumptions that such events are more intrusive than similar events occurring during daytime hours.

Compatible: A designation employed within the Land Use Matrix (Table 2-2) to denote that a proposed land use is not prohibited or restricted by the Land Use Matrix within the specified zone.

Consistent: A determination made by the ALUC when a referral meets the conditions outlined in the ALUP.

Crosswind departure: A VFR departure procedure in which an aircraft exits the airport area by extension of the crosswind leg of the traffic pattern.

Crosswind leg: A segment of the standard airport traffic pattern which extends at right angles from the extended runway centerline at some distance from the departure end of the runway. The base leg extends from the upwind leg of the traffic pattern to the downwind leg and is flown in the direction away from runway centerline.

Course Deviation Indicator (CDI): An instrument commonly installed in aircraft and utilized for aerial navigation, which depicts the location, in the horizontal plane, of the aircraft relative the intended direction of flight.

Decibel (dB): A unit for expressing the relative intensity of sounds on a scale of zero for the average least perceptible sound to about 130 for the average pain level.

Decision altitude (DA): The minimum altitude above mean sea level to which an aircraft operating according to a precision instrument approach may descend without visual contact with the airport or the airport environs.

Decision height (DH): The minimum vertical distance above the height of the intended landing zone to which an aircraft operating according to a precision instrument approach may descend without visual contact with the airport or the airport environs.

Density of Land Use: The number of people a development can attract per acre.

Density of Residential Development: The number of dwelling units per acre in a development or proposed development.

Departure Procedure (DP): See **instrument departure procedure**.

Descent slope: The angle, with respect to a horizontal plane, of the flight path of an aircraft descending from a higher altitude to a lower altitude (usually expressed in degrees or in feet per nautical mile). Also referred to as **angle of descent**.

Distance Measuring Equipment (DME): An apparatus, consisting of a ground-based radio transmitter and a specialized airborne receiver, which provides information regarding the slant-range distance of an aircraft from the ground-based facility. Also, by extension, any airborne maneuver, course, or flight path which is determined through the application of DME information.

Downwind departure: A VFR departure procedure in which an aircraft exits the airport area by extension of the downwind leg of the traffic pattern.

Downwind leg: A segment of the standard airport traffic pattern which is parallel to the runway of intended landing, is usually between 1/2 and 1 1/2 miles lateral to the runway, and is flown in a direction opposite to the direction of intended landing. The downwind leg is, in most instances, is the initial leg of the traffic pattern for landing aircraft. The altitude of aircraft flying the base leg is usually between 1000 and 800 feet above ground level.

Emergency Aircraft Landing Site: Any area of usable space which is at least 300 feet in length and 75 feet in width and which is oriented in such manner that its long axis is approximately parallel to the most frequently used adjacent flight path or paths.

Enplaned passengers: The total number of revenue-producing passengers boarding aircraft, including originating, stopover, and transfer passengers, in scheduled and nonscheduled services.

Fixed base operator (FBO): A provider of support services to users of an airport. Such services include fueling, hangaring, flight training, repair, maintenance, and other services.

General aviation: That portion of civil aviation which encompasses all facets of aviation except air carriers and air charters.

Glide slope: An apparatus which provides, by means of radio signals or light signals, vertical guidance to aircraft approaching to land, or (by extension) the vertical flight path flown by aircraft receiving guidance from such a system.

Global positioning system (GPS): A navigational aid which determines the position, direction of flight, speed, and (to a limited extent) altitude of an aircraft by means of signals received from a constellation of earth-orbiting satellites.

Global positioning system (GPS) approach: A series of standardized, predetermined, and published aerial maneuvers which are based on navigational data received from earth-orbiting satellites and which enable aircraft to descend toward an airport with the intention of landing when meteorologic conditions are such that a safe approach cannot be made solely through the use of visual information. A typical GPS approach permits aircraft to descend to within 400-500 feet of the surface solely on the basis of satellite navigation aids.

Global positioning system (GPS) overlay: An FAA designation applied to certain instrument approach procedures originally designed to be executed by reference to ground-based navigational aids which authorizes pilots to perform the approach solely by reference to navigational information provided by earth-orbiting GPS satellites.

Gross Area or Gross Acreage: For the purposes of this ALUP, the terms *gross area* and *gross acreage* will be considered interchangeable, and will be considered to indicate a measurement of the entire size of the site, parcel, intended use, or zone specified by a referral to the ALUC.

Hospitals: As employed in the Land Use Matrix and other sections of the ALUP, the term "hospitals" shall encompass any facility other than a private physician's office or outpatient clinic, in which care is offered to individuals who exhibit physical, emotional, or mental disability or illness. Examples include acute care hospitals, freestanding emergency rooms, nursing homes, board-and-care facilities, birthing centers, mental institutions, and rehabilitation centers.

Hotels & Motels: For purposes of the Land Use Matrix and other sections of the ALUP, the term "hotels & motels" shall denote any structure or facility intended or suitable for short-term occupancy by persons as a temporary dwelling. Examples of this type of land use include hotels, motels, bed and breakfast inns, youth hostels, pensions, and temporary shelters.

Inconsistent: A determination made by the ALUC when a proposed local action does not meet the conditions outlined in the ALUP.

Instrument approach: A series of standardized, predetermined, and published aerial maneuvers which are based on navigational data received from ground-based navigational aids or satellites and which enable aircraft to descend toward an airport with the intention of landing when meteorologic conditions are such that a safe approach cannot be made solely through the use of visual information.

Instrument departure procedure (DP): A series of standardized, predetermined, and published aerial maneuvers which are based on navigational data received from ground-based navigational aids or satellites and which enable aircraft to depart from an airport when meteorologic conditions are such that a safe departure cannot be made solely through the use of visual information. Formerly known as a **standard instrument departure (SID)**.

Instrument flight rules (IFR): A set of FAA rules, regulations, and procedures which define flight operations under conditions which do not permit navigation by means of visual information alone. Also employed as an adjective to designate a flight plan which will enable an aircraft to operate under conditions which preclude navigation by means of visual information.

Instrument landing system (ILS): A precision instrument approach system which provides aircraft with both vertical (glideslope) and lateral guidance by means of radio signals transmitted from installations within the physical boundaries of the airport.

Instrument landing system (ILS) approach: A series of standardized, predetermined, and published aerial maneuvers which are based on vertical and lateral navigational data received from radio transmitters located within the physical boundaries of the airport and which enable aircraft to descend toward an airport with the intention of landing when meteorologic conditions are such that a safe approach cannot be made solely through the use of visual information. A typical ILS approach permits aircraft to descend to within 200 feet of the surface.

Instrument meteorologic conditions (IMC): Weather conditions specified in FAA regulations under which aircraft are not authorized to takeoff, land, or maneuver under visual flight rules and may operate only by reference to electronic aids to navigation. The visibility and cloud clearance requirements for IMC are determined by the airspace designation in which and aircraft is operating, by the aircraft's altitude above both sea level and ground level, and by whether the aircraft is operating in daylight or at night.

Localizer (LOC): An apparatus which provides, by means of radio signals from a transmitter located within the physical boundaries of an airport and a specialized airborne receiver, lateral course guidance for aircraft descending to land.

Localizer approach: A series of standardized, predetermined, and published aerial maneuvers which are based on lateral guidance information received by means of a localizer transmitter located within the physical boundaries of an airport and which enable aircraft to descend toward an airport with the intention of landing when meteorologic conditions are such that a safe approach cannot be made solely through the use of visual information. Localizer approaches do not provide vertical guidance, but localizers are often coupled with glide slope transmitters. A typical localizer approach permits aircraft to descend to within 400-500 feet of the surface solely on the basis of radio navigation aids.

Localizer-type directional array (LDA): A type of apparatus which provides, by means of radio signals from a transmitter located within the physical boundaries of an airport and a specialized airborne receiver, lateral course guidance for aircraft descending to land. The primary distinction between an LOC and an LDA is that the final approach course provided by the LDA is not aligned with the runway centerline. Glide slope information is never provided in conjunction with an LDA.

Localizer-type directional array (LDA) approach: A series of standardized, predetermined, and published aerial maneuvers which are based on lateral guidance information received by means of an LDA transmitter located within the physical boundaries of an airport and which enable aircraft to descend toward an airport with the intention of landing when meteorologic conditions are such that a safe approach cannot be made solely through the use of visual information.

Minimum descent altitude (MDA): The minimum altitude above mean sea level to which an aircraft operating according to a non-precision instrument approach may descend without visual contact with the airport or the airport environs.

Minimum descent height (MDH): The minimum vertical distance above the height of the intended landing zone to which an aircraft operating according to a non-precision instrument approach may descend without visual contact with the airport or the airport environs.

Missed approach: An instrument approach which does not terminate in a landing. Usual reasons for a missed approach include failure to establish visual contact with the airport environs at the completion of an instrument approach, loss of course guidance, or instructions from air traffic control.

Missed approach course: A standardized, predetermined, and published flight path to be flown in the event of a missed approach.

Multifamily residential (land use): Any project, development, or other land use in which separate families or individuals occupy dwelling units which share a common wall or a common roof, or occupy a common legal parcel of real estate. Examples include duplexes, triplexes, quadriplexes, apartment buildings, condominiums, townhouses, and residential courts. In addition, institutional uses such as hospitals, nursing homes, board and care facilities, correctional institutions, and boarding schools, which entail the long-term occupancy of a single-structure by unrelated individuals will be considered to be multifamily residential in nature.

Nautical mile (nm): a measure of distance equal to 6076.115 feet (1852 meters).

Non-directional beacon (NDB): A radio beacon which transmits signals which do not contain encoded directional information, but which can be used for as a "homing" signal for aircraft tracking to or away from the transmitter.

Non-directional beacon (NDB) approach: A series of standardized, predetermined, and published aerial maneuvers which are based on lateral guidance information received by means of an NDB transmitter located either at or remote from an airport and which enable aircraft to descend with the intention of landing when meteorologic conditions are such that a safe approach cannot be made solely through the use of visual information.

Non-precision instrument approach procedure: An instrument approach procedure for which vertical guidance is not provided. Common types of non-precision instrument approach procedures include VOR, GPS, localizer, NDB, and LDA.

Office buildings: As employed in the Land Use Matrix and other sections of the ALUP, the term "office buildings" shall encompass any development, regardless of structure size, which includes significant floor space suitable for use by personnel performing or providing clerical, professional, or financial services as a primary use. The presence of limited office space for support of another primary function which is consistent with the ALUP, however, is not considered an "office building" under this definition.

Open Space: Land which is substantially free of structures, vehicles, and trees, which is relatively smooth and level, and which is devoted to use characterized by low occupancy levels.

Operation: A takeoff or landing

Precision instrument approach procedure: An instrument approach procedure for which vertical guidance is provided. ILS is the only common type of precision instrument approach currently in use. In the near future, certain GPS approaches will be upgraded to provide vertical guidance information, as well.

Prohibited: A determination made by the ALUC when a proposed local action does not meet the criteria set forth in the Land Use Matrix.

Public buildings: For purposes of the Land Use Matrix and other sections of the ALUP, the term "public buildings" shall be taken to mean structures which are utilized by government or social agencies for the provision of services to the public. Examples of such uses would include post offices, police or fire stations, and offices and agencies of local, state, or federal government.

Rate of climb: The vertical speed or rate of change in altitude of an aircraft ascending from a lower altitude to a higher altitude (usually expressed in feet per minute).

Rate of descent: The vertical speed or rate of change in altitude of an aircraft descending from a higher altitude to a lower altitude (usually expressed in feet per minute).

Rural residential (land use): As employed in the Land Use Matrix and other sections of the ALUP, the term "rural residential" indicates use of land for dwellings in such manner that no more than one primary dwelling unit is developed per five acres of property.

Single-family residential (land use): As employed in the Land Use Matrix and other sections of the ALUP, the term "single-family residential" indicates use of land for dwellings in such manner that no more than one primary dwelling unit is developed on each legal parcel and the size of each legal parcel is less than one acre.

Schools, colleges, and universities: For purposes of the Land Use Matrix and other sections of the ALUP, the term "schools, colleges, and universities" shall be taken to indicate any land use in which groups of individuals, particularly children, are engaged in activities, either formal or informal, which are intended to provide instruction, information, or mental or intellectual stimulation. Examples of such uses would include primary, secondary, or high schools (public or private), colleges, universities, graduate schools, specialized vocational schools, seminaries, nurseries, pre-schools, and day care centers.

Standard instrument departure (SID): See **instrument departure procedure**.

Standard Terminal Arrival Route (STAR): A series of standardized, predetermined, and published routes, procedures and/or maneuvers which enable aircraft to transition safely from the en route environment to the terminal environment. A STAR does not culminate in a landing, but terminates at a point from which an instrument approach to landing may be initiated.

Straight-out departure: A VFR departure procedure in which an aircraft exits the airport area along the extended centerline of the departure runway by extension of the upwind leg of the traffic pattern.

Suburban residential (land use): As employed in the Land Use Matrix and other sections of the ALUP, the term "suburban residential" indicates use of land for dwellings in such a manner that no more than one primary dwelling unit is developed on each legal parcel and the size of each legal parcel is 1 acre to 5 acres.

Tactical air navigation facility (TACAN): A ground-based radio navigational aid which transmits encoded signals that enable aircraft equipped with appropriate receivers to determine both bearing and distance with respect to the facility. The information with respect to bearing is generally available only to military aircraft, while information regarding distance is usable by both military and civil aircraft. TACAN facilities are frequently co-located with VORs.

Unobstructable Emergency Aircraft Landing Site: Any emergency aircraft landing site which cannot be eliminated or reduced in size without a general plan amendment, specific plan or specific plan amendment, zoning ordinance or zoning ordinance amendments, or other referring agency action which requires mandatory review by the ALUC.

Upwind leg: A segment of the airport traffic pattern which is coincident with the centerline of the departure runway. The upwind leg is the initial leg of the traffic pattern for departing aircraft and extends from takeoff to the crosswind leg or departure from the airport area.

Very high frequency omnidirectional range (VOR): A ground-based radio navigational aid which transmits encoded signals that enable aircraft equipped with appropriate receivers to determine their bearing with respect to the facility.

Very high frequency omnidirectional range with distance-measuring equipment (VOR-DME): A ground-based radio navigational aid which combines a VOR transmitter with a DME facility and which transmits encoded signals that enable aircraft equipped with appropriate receivers to determine both relative bearing and distance with respect to the facility.

Very high frequency omnidirectional range with tactical air navigation (VORTAC): A ground-based radio navigational aid which combines a VOR transmitter with a TACAN facility and which transmits encoded signals that enable both military and civilian aircraft equipped with appropriate receivers to determine both bearing and distance with respect to the facility.

Visual approach: A procedure whereby an aircraft which is operating in VMC according to an IFR flight plan and under control of an air traffic control facility may proceed to the airport of destination and land using visual navigational cues.

Visual approach slope indicator (VASI): A navigational aid installed adjacent to an airport runway which provides, by means of colored light beams, vertical course guidance to aircraft approaching to land on that runway. The usual descent slope provided by VASI installations is 3°.

Visual flight rules (VFR): A set of FAA rules, regulations, and procedures which define flight operations under conditions which allow navigation by means of visual information, pilotage, and dead reckoning alone. Also employed as an adjective to designate a flight plan which will enable an aircraft to operate under conditions which permit navigation by means of visual information alone. For takeoff and landing, operation under visual flight rules requires 3 statute miles visibility and a cloud ceiling of at least 1000 feet. A special VFR clearance may be obtained from ATC if visibility is 1 statute mile or greater and the pilot can maneuver to remain clear of clouds in the vicinity.

Visual meteorologic conditions (VMC): Weather conditions specified in FAA regulations under which aircraft are authorized to takeoff, land, and maneuver under visual flight rules and by means of only visual navigational information. Electronic aids to navigation may be utilized by aircraft operating in VMC, but are not required. The visibility and cloud clearance requirements for VMC are determined by the airspace designation in which and aircraft is operating, by the aircraft's altitude above both sea level and ground level, and by whether the aircraft is operating in daylight or at night.

VOR approach: A series of standardized, predetermined, and published aerial maneuvers which are based on lateral guidance information received by means of a VOR transmitter and which enable aircraft to descend toward an airport with the intention of landing when meteorologic conditions are such that a safe approach cannot be made solely through the use of visual information. The VOR facility may be located within the physical boundaries of the destination airport or at some distance from the airport. VOR approaches do not provide vertical guidance. A typical VOR approach permits aircraft to descend to within 400-500 feet of the surface solely on the basis of radio navigation aids.

This page left intentionally blank.

Appendix J

Real Estate Disclosure Law and Legislation

ESA

Assembly Bill No. 2776

CHAPTER 496

An act to amend Section 11010 of the Business and Professions Code, and to amend Sections 1102.6, 1103.4, and 1353 of the Civil Code, relating to aviation.

[Approved by Governor September 12, 2002. Filed with Secretary of State September 12, 2002.]

LEGISLATIVE COUNSEL'S DIGEST

AB 2776, Simitian. Aviation: noise.

(1) Existing law requires any person who intends to offer subdivided lands within California for sale or lease to file with the Department of Real Estate an application for a public report consisting of a notice of intention and a completed questionnaire that includes, among other things, the location of all existing airports, and of all proposed airports shown on the general plan of any city or county, located within 2 statute miles of the subdivision. Existing law requires that a copy of the public report of the Real Estate Commissioner, when issued, be given to the prospective purchaser by the owner, subdivider, or agent prior to the execution of a binding contract or agreement for the sale or lease of any lot or parcel in a subdivision or upon request by any member of the public.

This bill would require the notice of intention filed with the application for a public report, to include a statement regarding whether the property is encompassed within an airport influence area, as defined.

(2) The Davis-Stirling Common Interest Development Act regulates common interest developments and defines the declarations and other governing documents that govern the operation of common interest developments and the associations that manage common interest developments. A declaration is required to contain specified information. Existing law provides that an owner of a separate interest in a common interest development must provide certain items to a prospective purchaser prior to transfer of title, including, among other things, a copy of the governing documents of the common interest development.

This bill would require that any declaration, recorded after January 1, 2004, contain a statement regarding whether the property is encompassed within an airport influence area.

(3) Existing law requires a seller of residential property, to make disclosures upon the transfer of that property, and sets forth the content

and form of these disclosures in a Real Estate Transfer Disclosure Statement and a Natural Hazard Disclosure Statement. Existing law requires certain sellers of residential real property who have actual knowledge that the property is affected by or zoned to permit certain manufacturing, commercial, or airport uses to give written notice of that knowledge, as soon as practicable before transfer of title. Existing law requires the disclosure statement to advise a purchaser that other reports and disclosures, such as an inspection report, have or will be made in connection with the transfer.

This bill would revise the Real Estate Transfer Disclosure Statement to require that statement to advise the prospective purchaser of other disclosures required by law, including the Natural Hazard Disclosure Report/Statement that may include airport annoyances, earthquake, fire, flood, or special assessment information, that have or will be made in connection with the transfer.

(4) Existing law limits the liability of a transferor for failing to disclose natural hazards if the transferor obtains a report or opinion prepared by a licensed engineer, land surveyor, geologist, or expert in natural hazard discovery dealing with matters within the scope of the professional's license or expertise.

The bill would condition this limitation upon the expert in natural hazard discovery determining whether the property is within an airport influence area and if so, providing notice with the report or opinion.

This bill would provide that its provisions will become operative on January 1, 2004.

The people of the State of California do enact as follows:

SECTION 1. The Legislature finds and declares that the current mechanisms for providing notice to homebuyers of potential airport impact are inadequate, as evidenced by the number of complaints and lawsuits regarding airport noise by residents of surrounding communities.

SEC. 2. Section 11010 of the Business and Professions Code is amended to read:

11010. (a) Except as otherwise provided pursuant to subdivision (c) or elsewhere in this chapter, any person who intends to offer subdivided lands within this state for sale or lease shall file with the Department of Real Estate an application for a public report consisting of a notice of intention and a completed questionnaire on a form prepared by the department.

(b) The notice of intention shall contain the following information about the subdivided lands and the proposed offering:

(1) The name and address of the owner.

(2) The name and address of the subdivider.

(3) The legal description and area of lands.

(4) A true statement of the condition of the title to the land, particularly including all encumbrances thereon.

(5) A true statement of the terms and conditions on which it is intended to dispose of the land, together with copies of any contracts intended to be used.

(6) A true statement of the provisions, if any, that have been made for public utilities in the proposed subdivision, including water, electricity, gas, telephone, and sewerage facilities. For subdivided lands that were subject to the imposition of a condition pursuant to subdivision (b) of Section 66473.7 of the Government Code, the true statement of the provisions made for water shall be satisfied by submitting a copy of the written verification of the available water supply obtained pursuant to Section 66473.7 of the Government Code.

(7) A true statement of the use or uses for which the proposed subdivision will be offered.

(8) A true statement of the provisions, if any, limiting the use or occupancy of the parcels in the subdivision.

(9) A true statement of the amount of indebtedness that is a lien upon the subdivision or any part thereof, and that was incurred to pay for the construction of any onsite or offsite improvement, or any community or recreational facility.

(10) A true statement or reasonable estimate, if applicable, of the amount of any indebtedness which has been or is proposed to be incurred by an existing or proposed special district, entity, taxing area, assessment district, or community facilities district within the boundaries of which, the subdivision, or any part thereof, is located, and that is to pay for the construction or installation of any improvement or to furnish community or recreational facilities to that subdivision, and which amounts are to be obtained by ad valorem tax or assessment, or by a special assessment or tax upon the subdivision, or any part thereof.

(11) (A) As to each school district serving the subdivision, a statement from the appropriate district that indicates the location of each high school, junior high school, and elementary school serving the subdivision, or documentation that a statement to that effect has been requested from the appropriate school district.

(B) In the event that, as of the date the notice of intention and application for issuance of a public report are otherwise deemed to be qualitatively and substantially complete pursuant to Section 11010.2, the statement described in subparagraph (A) has not been provided by any school district serving the subdivision, the person who filed the

notice of intention and application for issuance of a public report shall immediately provide the department with the name, address, and telephone number of that district.

(12) (A) The location of all existing airports, and of all proposed airports shown on the general plan of any city or county, located within two statute miles of the subdivision. If the property is located within an airport influence area, the following statement shall be included in the notice of intention:

NOTICE OF AIRPORT IN VICINITY

This property is presently located in the vicinity of an airport, within what is known as an airport influence area. For that reason, the property may be subject to some of the annoyances or inconveniences associated with proximity to airport operations (for example: noise, vibration, or odors). Individual sensitivities to those annoyances can vary from person to person. You may wish to consider what airport annoyances, if any, are associated with the property before you complete your purchase and determine whether they are acceptable to you.

(B) For purposes of this section, an ''airport influence area,'' also known as an ''airport referral area,'' is the area in which current or future airport-related noise, overflight, safety, or airspace protection factors may significantly affect land uses or necessitate restrictions on those uses as determined by an airport land use commission.

(13) A true statement, if applicable, referencing any soils or geologic report or soils and geologic reports that have been prepared specifically for the subdivision.

(14) A true statement of whether or not fill is used, or is proposed to be used in the subdivision and a statement giving the name and the location of the public agency where information concerning soil conditions in the subdivision is available.

(15) Any other information that the owner, his or her agent, or the subdivider may desire to present.

(c) The commissioner may, by regulation, or on the basis of the particular circumstances of a proposed offering, waive the requirement of the submission of a completed questionnaire if the commissioner determines that prospective purchasers or lessees of the subdivision interests to be offered will be adequately protected through the issuance of a public report based solely upon information contained in the notice of intention.

SEC. 3. Section 1102.6 of the Civil Code is amended to read:

1102.6. The disclosures required by this article pertaining to the property proposed to be transferred are set forth in, and shall be made on a copy of, the following disclosure form:

State of California

Department of Real Estate

Disclosures in

Real Property

Transactions

Sixth Edition
2005

ARNOLD SCHWARZENEGGER
Governor
State of California

DALE BONNER
Secretary
Business, Transportation and Housing Agency

JEFF DAVI

Commissioner

Department of Real Estate

2005 booklet was revised pursuant to a consulting contract with Wallace, Puccio & Garrett; Principal Author and Editor – S. Guy Puccio.

2. Real Estate Transfer Disclosure Statement

The Real Estate Transfer Disclosure Statement (TDS) describes the condition of a property and, in the case of a sale, must be given to a prospective buyer as soon as practicable and before transfer of title. In the case of a transfer by a real property sales contract (as defined in Civil Code Section 2985) by a lease coupled with an option to purchase, or by a ground lease coupled with improvements, the TDS is to be delivered before the execution of any of the foregoing.

The seller and any broker(s)/agent(s) involved are to participate in the disclosures. If more than one broker/agent is involved, the broker/agent obtaining the offer is to deliver the disclosures to the prospective buyer unless the seller instructs otherwise.

Delivery to the prospective buyer of a report or opinion prepared by a licensed engineer, land surveyor, geologist, structural pest control operator, contractor, or other expert (dealing with matters within the scope of the professional's license or expertise) may limit the liability of the seller and the real estate broker(s)/agent(s) when making required disclosures. The overall intention is to provide meaningful disclosures about the condition of the property being sold or transferred.

(CAL. CIV. § 1102.4)

The following is the format of the Transfer Disclosure Statement:

REAL ESTATE TRANSFER DISCLOSURE STATEMENT

THIS DISCLOSURE STATEMENT CONCERNS THE REAL PROPERTY SITUATED IN THE CITY OF _____, COUNTY OF _____, STATE OF CALIFORNIA, DESCRIBED AS _____. THIS STATEMENT IS A DISCLOSURE OF THE CONDITION OF THE ABOVE DESCRIBED PROPERTY IN COMPLIANCE WITH SECTION 1102 OF THE CIVIL CODE AS OF _____, 20___. IT IS NOT A WARRANTY OF ANY KIND BY THE SELLER(S) OR ANY AGENT(S) REPRESENTING ANY PRINCIPAL(S) IN THIS TRANSACTION, AND IS NOT A SUBSTITUTE FOR ANY INSPECTIONS OR WARRANTIES THE PRINCIPAL(S) MAY WISH TO OBTAIN.

I

COORDINATION WITH OTHER DISCLOSURE FORMS

This Real Estate Transfer Disclosure Statement is made pursuant to Section 1102 of the Civil Code. Other statutes require disclosures, depending upon the details of the particular real estate transaction (for example: special study zone and purchase-money liens on residential property).

Substituted Disclosures: The following disclosures have or will be made in connection with this real estate transfer, and are intended to satisfy the disclosure obligations on this form, where the subject matter is the same:

☐ Inspection reports completed pursuant to the contract of sale or receipt for deposit.

☐ Additional inspection reports or disclosures:

_____

_____

_____

II

SELLER'S INFORMATION

The Seller discloses the following information with the knowledge that even though this is not a warranty, prospective Buyers may rely on this information in deciding whether and on what terms to purchase the subject property. Seller hereby authorizes any agent(s) representing any principal(s) in this transaction to provide a copy of this statement to any person or entity in connection with any actual or anticipated sale of the property.

THE FOLLOWING ARE REPRESENTATIONS MADE BY THE SELLER(S) AND ARE NOT THE REPRESENTATIONS OF THE AGENT(S), IF ANY. THIS INFORMATION IS A DISCLOSURE AND IS NOT INTENDED TO BE PART OF ANY CONTRACT BETWEEN THE BUYER AND SELLER.

Seller ___ is ___ is not occupying the property.

A. The subject property has the items checked below (read across):

__Range	__Oven	__Microwave
__Dishwasher	__Trash Compactor	__Garbage Disposal
__Washer/Dryer Hookups		__Rain Gutters
__Burglar Alarms	__Smoke Detector(s)	__Fire Alarm
__TV Antenna	__Satellite Dish	__Intercom
__Central Heating	__Central Air Cndtng.	__Evaporative Cooler(s)
__Wall/Window Air Cndtng.	__Sprinklers	__Public Sewer System
__Septic Tank	__Sump Pump	__Water Softener
__Patio/Decking	__Built-in Barbecue	__Gazebo
__Sauna		
__Hot Tub __ Locking Safety Cover*	__Pool __ Child Resistant Barrier*	__Spa__ Locking Safety Cover*
__Security Gate(s)	__Automatic Garage Door Opener(s)*	__Number Remote Controls
Garage: __Attached	__Not Attached	__Carport
Pool/Spa Heater: __Gas	__Solar	__Electric
Water Heater: __Gas	__Water Heater Anchored, Braced, or Strapped*	__Private Utility or Other _____
Water Supply: __City	__Well	
Gas Supply: __Utility	__Bottled	
__Window Screens	__Window Security Bars	
	__Quick Release Mechanism on Bedroom Windows*	

Exhaust Fan(s) in _____220 Volt Wiring in _____ Fireplace(s) in _____

Gas Starter _____ Roof(s): Type: _____ Age: _____ (approx.)

Other: _____

Are there, to the best of your (Seller's) knowledge, any of the above that are not in operating condition? ___Yes ___No. If yes, then describe.

(Attach additional sheets if necessary): _____

_____

_____

_____

B. Are you (Seller) aware of any significant defects/malfunctions in any of the following? __ Yes __ No. If yes, check appropriate space(s) below.

___Interior Walls ___Ceilings ___Floors ___Exterior Walls ___Insulation __Roof(s) ___Windows ___Doors ___Foundation ___Slab(s) ___Driveways ___Sidewalks ___Walls/Fences ___Electrical Systems ___Plumbing/Sewers/Septics ___Other

Structural Components (Describe: _____

_____)

If any of the above is checked, explain. (Attach additional sheets if necessary): _

_____

_____

_____

* This garage door opener or child resistant pool barrier may not be in compliance with the safety standards relating to automatic reversing devices as set forth in Chapter 12.5 (commencing with Section 19890) of Part 3 of Division 13 of, or with the pool safety standards of Article 2.5 (commencing with Section 115920) of Chapter 5 of Part 10 of Division 104 of, the Health and Safety Code. The water heater may not be anchored, braced, or strapped in accordance with Section 19211 of the Health and Safety Code. Window security bars may not have quick-release mechanisms in compliance with the 1995 Edition of the California Building Standards Code.

C. Are you (Seller) aware of any of the following:

1. Substances, materials or products which may be an environmental hazard such as, but not limited to, asbestos, formaldehyde, radon gas, lead-based paint, fuel or chemical storage tanks, and contaminated soil or water on the subject property ..... __Yes __No
2. Features of the property shared in common with adjoining landowners, such as walls, fences, and driveways, whose use or responsibility for maintenance may have an effect on the subject property ..... __Yes __No
3. Any encroachments, easements or similar matters that may affect your interest in the subject property ..... __Yes __No
4. Room additions, structural modifications, or other alterations or repairs made without necessary permits..... __Yes __No
5. Room additions, structural modifications, or other alterations or repairs not in compliance with building codes . __Yes __No
6. Fill (compacted or otherwise) on the property or any portion thereof..... __Yes __No
7. Any settling from any cause, or slippage, sliding, or other soil problems..... __Yes __No
8. Flooding, drainage or grading problems ..... __Yes __No
9. Major damage to the property or any of the structures from fire, earthquake, floods, or landslides ..... __Yes __No
10. Any zoning violations, nonconforming uses, violations of "setback" requirements..... __Yes __No
11. Neighborhood noise problems or other nuisances..... __Yes __No
12. CC&R's or other deed restrictions or obligations ..... __Yes __No
13. Homeowners' Association which has any authority over the subject property ..... __Yes __No
14. Any "common area" (facilities such as pools, tennis courts, walkways, or other areas co-owned in undivided interest __Yes __No

with others) .....

15. Any notices of abatement or citations against the property... __Yes __No

16. Any lawsuits by or against the seller threatening to or affecting this real property, including any lawsuits alleging a defect or deficiency in this real property or "common areas" (facilities such as pools, tennis courts, walkways, or other areas co-owned in undivided interest with others) ..... __Yes __No

If the answer to any of these is yes, explain. (Attach additional sheets if necessary) _____

_____

_____

Seller certifies that the information herein is true and correct to the best of the Seller's knowledge as of the date signed by the Seller.

Seller _____ Date _____

Seller _____ Date _____

III

AGENT'S INSPECTION DISCLOSURE

(To be completed only if the Seller is represented by an agent in this transaction.)

THE UNDERSIGNED, BASED ON THE ABOVE INQUIRY OF THE SELLER(S) AS TO THE CONDITION OF THE PROPERTY AND BASED ON A REASONABLY COMPETENT AND DILIGENT VISUAL INSPECTION OF THE ACCESSIBLE AREAS OF THE PROPERTY IN CONJUNCTION WITH THAT INQUIRY, STATES THE FOLLOWING:

☐ Agent notes no items for disclosure.

☐ Agent notes the following items:

_____

_____

_____

_____

Agent (Broker Representing Seller) _____ By _____ Date_____
(Please Print) (Associate Licensee or Broker-Signature)

IV

AGENT'S INSPECTION DISCLOSURE

(To be completed only if the agent who has obtained the offer is other than the agent above.)

THE UNDERSIGNED, BASED ON A REASONABLY COMPETENT AND DILIGENT VISUAL INSPECTION OF THE ACCESSIBLE AREAS OF THE PROPERTY, STATES THE FOLLOWING:

☐ Agent notes no items for disclosure.

☐ Agent notes the following items:

_____

_____

_____

_____

Agent (Broker Representing Seller) _____ By _____ Date_____

(Please Print) (Associate Licensee or Broker-Signature)

V

BUYER(S) AND SELLER(S) MAY WISH TO OBTAIN PROFESSIONAL ADVICE AND/OR INSPECTIONS OF THE PROPERTY AND TO PROVIDE FOR APPROPRIATE PROVISIONS IN A CONTRACT BETWEEN BUYER AND SELLER(S) WITH RESPECT TO ANY ADVICE/INSPECTIONS/DEFECTS

I/WE ACKNOWLEDGE RECEIPT OF A COPY OF THIS STATEMENT

Seller_____ Date_____ Buyer_____ Date_____

Seller_____ Date_____ Buyer_____ Date_____

Agent (Broker Representing Seller) _____ By _____ Date_____
(Please Print) (Associate Licensee or Broker-Signature)

Agent (Broker Obtaining the Offer) _____ By _____ Date_____
(Please Print) (Associate Licensee or Broker-Signature)

SECTION 1102.3 OF THE CIVIL CODE PROVIDES A BUYER WITH THE RIGHT TO RESCIND A PURCHASE CONTRACT FOR AT LEAST THREE DAYS AFTER THE DELIVERY OF THIS DISCLOSURE IF DELIVERY OCCURS AFTER THE SIGNING OF AN OFFER TO PURCHASE. IF YOU WISH TO RESCIND THE CONTRACT, YOU MUST ACT WITHIN THE PRESCRIBED PERIOD.

A REAL ESTATE BROKER IS QUALIFIED TO ADVISE ON REAL ESTATE. IF YOU DESIRE LEGAL ADVICE, CONSULT YOUR ATTORNEY.

(CAL. CIV. § 1102 et. seq.)

SEC. 4. Section 1103.4 of the Civil Code is amended to read:

1103.4. (a) Neither the transferor nor any listing or selling agent shall be liable for any error, inaccuracy, or omission of any information delivered pursuant to this article if the error, inaccuracy, or omission was not within the personal knowledge of the transferor or the listing or selling agent, and was based on information timely provided by public agencies or by other persons providing information as specified in subdivision (c) that is required to be disclosed pursuant to this article, and ordinary care was exercised in obtaining and transmitting the information.

(b) The delivery of any information required to be disclosed by this article to a prospective transferee by a public agency or other person providing information required to be disclosed pursuant to this article shall be deemed to comply with the requirements of this article and shall relieve the transferor or any listing or selling agent of any further duty under this article with respect to that item of information.

(c) The delivery of a report or opinion prepared by a licensed engineer, land surveyor, geologist, or expert in natural hazard discovery dealing with matters within the scope of the professional's license or expertise, shall be sufficient compliance for application of the exemption provided by subdivision (a) if the information is provided to the prospective transferee pursuant to a request therefor, whether written or oral. In responding to that request, an expert may indicate, in writing, an understanding that the information provided will be used in fulfilling the requirements of Section 1103.2 and, if so, shall indicate the required disclosures, or parts thereof, to which the information being furnished is applicable. Where that statement is furnished, the expert shall not be responsible for any items of information, or parts thereof, other than those expressly set forth in the statement. In responding to the request, the expert shall determine whether the property is within an airport influence area as defined in subdivision (b) of Section 11010 of the Business and Professions Code. If the property is within an airport influence area, the report shall contain the following statement:

NOTICE OF AIRPORT IN VICINITY

This property is presently located in the vicinity of an airport, within what is known as an airport influence area. For that reason, the property may be subject to some of the annoyances or inconveniences associated with proximity to airport operations (for example: noise, vibration, or odors). Individual sensitivities to those annoyances can vary from person to person. You may wish to consider what airport annoyances, if any, are associated with the property before you complete your purchase and determine whether they are acceptable to you.

SEC. 5. Section 1353 of the Civil Code is amended to read:

1353. (a) (1) A declaration, recorded on or after January 1, 1986, shall contain a legal description of the common interest development, and a statement that the common interest development is a community apartment project, condominium project, planned development, stock cooperative, or combination thereof. The declaration shall additionally set forth the name of the association and the restrictions on the use or enjoyment of any portion of the common interest development that are intended to be enforceable equitable servitudes. If the property is located within an airport influence area, a declaration, recorded after January 1, 2004, shall contain the following statement:

NOTICE OF AIRPORT IN VICINITY

This property is presently located in the vicinity of an airport, within what is known as an airport influence area. For that reason, the property may be subject to some of the annoyances or inconveniences associated with proximity to airport operations (for example: noise, vibration, or odors). Individual sensitivities to those annoyances can vary from person to person. You may wish to consider what airport annoyances, if any, are associated with the property before you complete your purchase and determine whether they are acceptable to you.

(2) For purposes of this section, an ‘‘airport influence area,’’ also known as an ‘‘airport referral area,’’ is the area in which current or future airport-related noise, overflight, safety, or airspace protection factors may significantly affect land uses or necessitate restrictions on those uses as determined by an airport land use commission.

(3) The statement in a declaration acknowledging that a property is located in an airport influence area does not constitute a title defect, lien, or encumbrance.

(b) The declaration may contain any other matters the original signator of the declaration or the owners consider appropriate.

SEC. 6. This act shall become operative on January 1, 2004.

O