EXHIBIT B

USA NORTH
OF CENTRAL/NORTHERN CALIFORNIA AND NEVADA
DIAL TOLL FREE
1-800-227-2600
AT LEAST TWO WORKING DAYS BEFORE YOU DIG

at&t

SITE NUMBER: CCU4243
SITE NAME: SERPENTINE LANE & QUARRY LANE
1056 SERPENTINE LANE
PLEASANTON, CA 94566

A/E DOCUMENT REVIEW STATUS						
Status Code						
1		Accepted - With minor or no comments, construction may proceed				
2		Not Accepted - Please resolve comments and resubmit				
Acceptance does not constitute approval of design details, calculations, analysis, test methods or materials developed or selected by the subcontractor and does not relieve subcontractor from full compliance obligations.						
	ENG	CONST				
Reviewed						
Status By				Date		

RF DATA SHEET

DATE ISSUED: 06/20/12 **REVISION: V1.0**

DRAWING INDEX		REV
25736-635-AA CCU4243-T01	TITLE SHEET	1
25736-635-AA CCU4243-C1	SITE SURVEY	1
25736-635-AA CCU4243-Z01	SITE PLAN / ENLARGED SITE PLAN	1
25736-635-AA CCU4243-Z02	ANTENNA AND EQUIPMENT LAYOUTS	1
25736-635-AA CCU4243-Z03	ELEVATIONS	1
25736-635-AA CCU4243-D01	DETAILS	1
25736-635-AA CCU4243-D02	DETAILS	1
25736-635-AA CCU4243-D03	EQUIPMENT CABINET DETAIL	1
25736-635-AA CCU4243-D04	EQUIPMENT CABINET DETAIL	1

CODE COMPLIANCE

ALL WORK AND MATERIALS SHALL BE PERFORMED AND INSTALLED IN ACCORDANCE WITH CURRENT EDITIONS OF THE CODES AS ADOPTED BY THE LOCAL GOVERNING AUTHORITIES. NOTHING IN THESE PLANS IS TO BE CONTRUCTED TO PERMIT WORK NOT CONFORMING TO THE LOCAL CODES.

2010 CALIFORNIA BUILDING CODE ('10 CBC)
2010 CALIFORNIA PLUMBING CODE ('10 CPC)
2010 CALIFORNIA ELECTRICAL CODE ('10 CEC)
2010 CALIFORNIA FIRE CODE ('10 CFC)

DRIVING DIRECTION

DIRECTIONS FROM PLEASANTON, CA:

1. HEAD TOWARD OLD SANTA RITA RD ON ROSEWOOD DR. 0.5 MI 2. TURN RIGHT ONTO SANTA RITA RD. 1.5 MI 3. TURN LEFT ONTO VALLEY AVE. 0.5 MI 4. TURN RIGHT ONTO QUARRY LN. 0.1 MI 5. TURN RIGHT ONTO SERPENTINE LN. 0.3 MI 6. YOUR DESTINATION ON SERPENTINE LN IS ON THE LEFT. THE TRIP TAKES 2.9 MI AND 7 MINS 1056 SERPENTINE LN, PLEASANTON, CA 94566-4760

VICINITY MAP

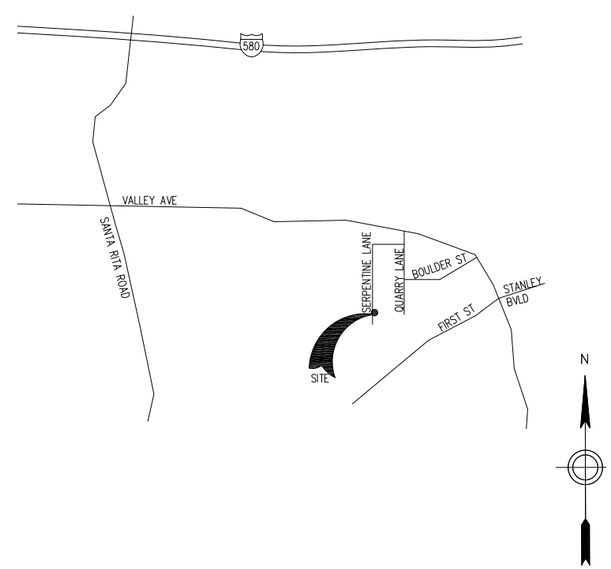

PROJECT DESCRIPTION

THE PROJECT CONSISTS OF THE INSTALLATION OF NEW RAISED STEEL EQUIPMENT SHELTER FOR AT&T EQUIPMENT CABINETS (2 RBA72, 6 PURCELL, 18 UMTS RRUS) AND (2) GPS ANTENNAS. INSTALL (30) NEW COAX, (9) NEW DTMA'S, (1) DC SURGE PROTECTION, (3) FIBER LINES, (6) DC POWER LINES, (36) RET'S, (12) ANTENNAS AND (6) LTE RRUS MOUNTED TO (N) MONOPINE. THE SYSTEM WILL TRANSMIT AND RECEIVE RADIO SIGNALS FOR A REGIONAL UMTS/LTE PCS NETWORK.

PROJECT INFORMATION

SITE ADDRESS:	1056 SERPENTINE LANE PLEASANTON, CA 94566
PROPERTY OWNER:	JEFF MAIN 6955 SIERRA COURT DUBLIN, CA 94568 (925) 556-9000
APPLICANT ADDRESS:	AT&T 4430 ROSEWOOD DRIVE, BLDG. # 3, 2ND FLOOR, PLEASANTON, CA 94588
JURISDICTION:	CITY OF PLEASANTON
PROPERTY TAX ID:	946-4547-115
ZONING DISTRICT:	COMMERCIAL
LATITUDE:	N37° 40' 18.52" (NAD 83)
LONGITUDE:	W121° 52' 00.42" (NAD 83)
ELEVATION:	349 FT AMSL (NAD 88)
CURRENT USE:	COMMERCIAL PARKING
PROPOSED USE:	TELECOMMUNICATIONS FACILITY

SITE QUALIFICATION PARTICIPANT

	NAME	COMPANY	CONTACT NUMBER
A/E	JOE CONNELL	CONNELL DESIGN GROUP, L.L.C.	(949) 306-4650
SAC	TOM JOHNSON	TRILLIUM CONSULTING	(714) 206-2879
RF	–	AT&T	–
ZONING	VALERIE TALLERICO	TRILLIUM CONSULTING	(714) 414-5618
LANDLORD	JEFF MAIN	–	(925) 556-9000
CONSTRUCTION	C.E. RASK	BECHTEL	(925) 983-2320

CDG
CONNELL DESIGN GROUP, LLC
ENGINEERING AND DESIGN
26455 RANCHO PARKWAY SOUTH, LAKE FOREST, CA 92630
(949) 753-8807 OFFICE - (949) 753-8833 FAX

SERPENTINE LANE & QUARRY LANE
CCU4243
1056 SERPENTINE LANE
PLEASANTON, CA 94566

at&t
4430 ROSEWOOD DRIVE, BLDG. # 3, 2ND FLOOR,
PLEASANTON, CA 94588

NO.	DATE	REVISIONS	BY	CHK	APP'D
1	01/09/13	PLANNING COMMENTS	JPC	JPC	JPC
0	07/31/12	ZD FOR SUBMITTAL	JPC	JPC	JPC

SCALE: AS NOTED DESIGNED BY: DRAWN BY: XX

TITLE SHEET

TITLE SHEET

JOB NUMBER	DRAWING NUMBER	SHEET NO.	REV
25736-635-AA	TL-CCU4243	T01	1

CDG NO. 12-6-CC4243 22 x 34 "D" SIZE

Copyright © Bechtel Corporation 2011. This item contains confidential information proprietary to Bechtel that is not to be used, disclosed, or reproduced in any format by any non-Bechtel party without Bechtel's prior written permission. Notwithstanding the above, "AT&T Mobility" has the right to use the information contained in this document pursuant to Contract 25471 between Bechtel Corporation and "AT&T Mobility". All rights reserved.

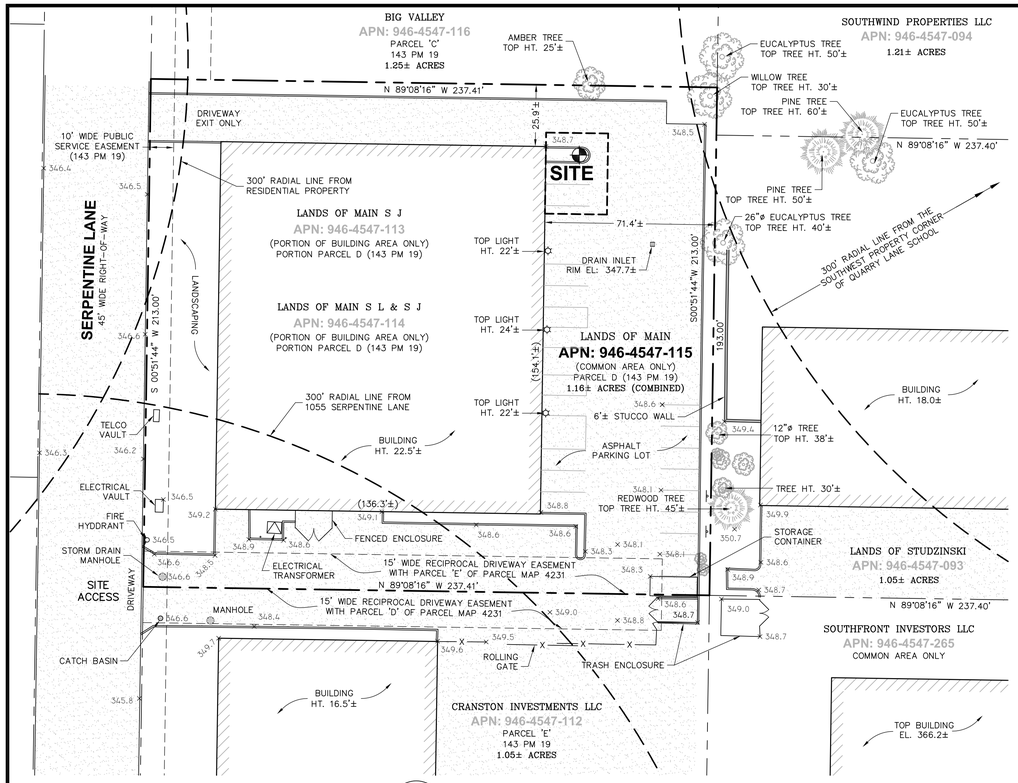

2 C1 OVERALL SITE PLAN
SCALE: 1" = 30'

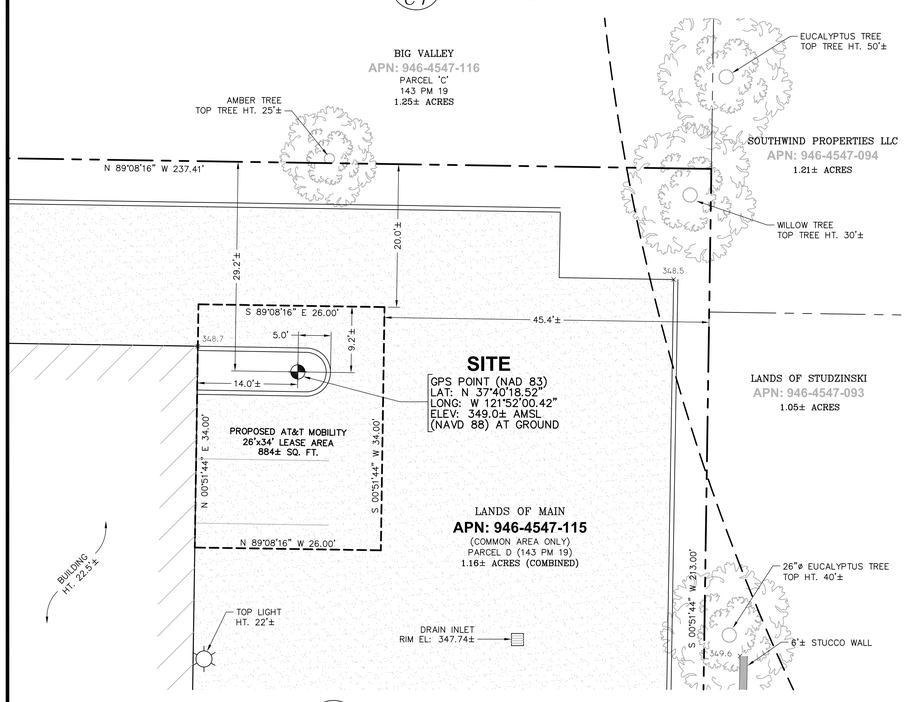

3 C1 ENLARGED SITE PLAN
SCALE: 1" = 10'

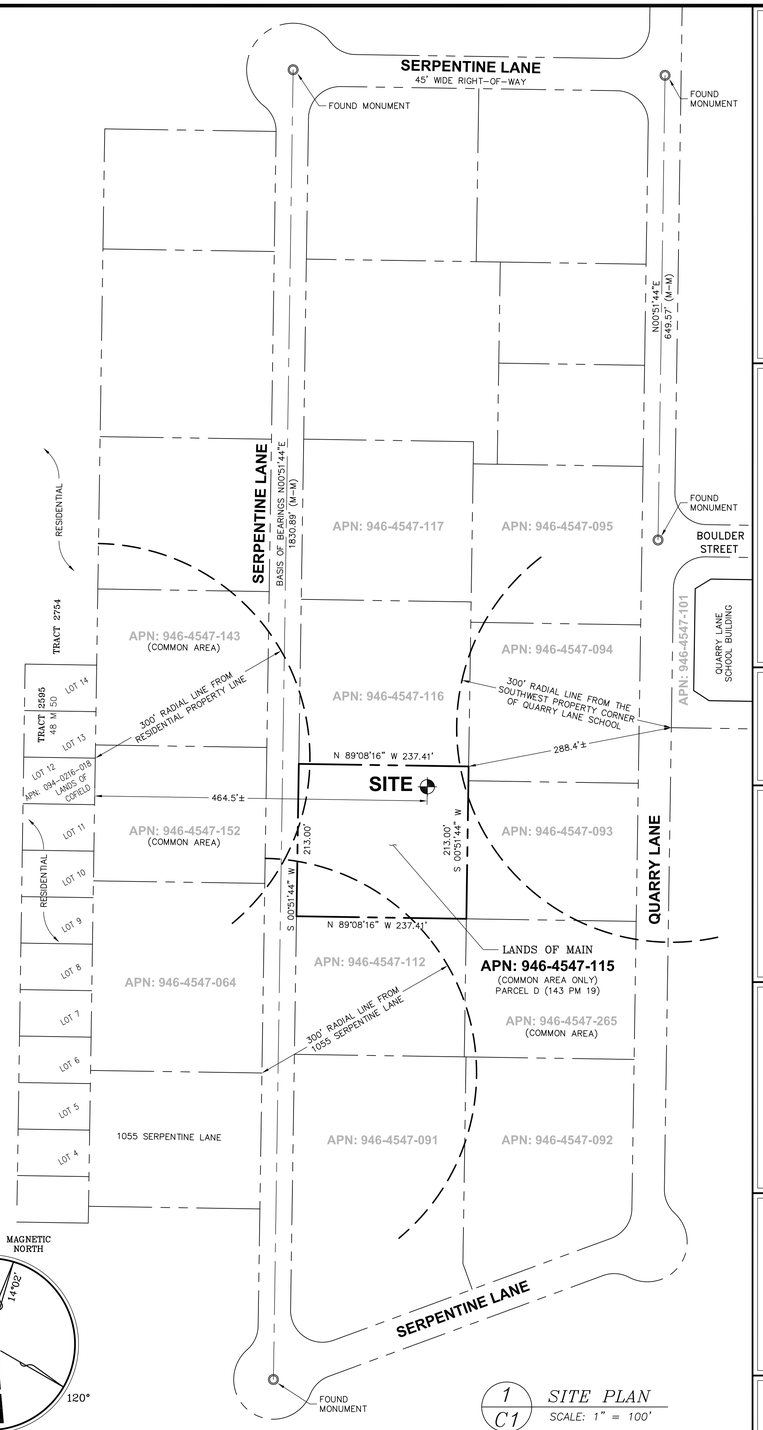

1 C1 SITE PLAN
SCALE: 1" = 100'

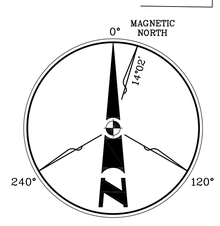

QUIET RIVER
Land Services Inc.

1 1/2 0 1
SCALE IN INCHES

MAGNETIC DECLINATION = 14°02'
PER NOAA-NGDC

SUFFICIENT SURVEY EVIDENCE WAS NOT RECOVERED TO ESTABLISH THE POSITION OF THE BOUNDARY LINES SHOWN HEREON. THE BOUNDARY REPRESENTED ON THIS MAP IS BASED ON COMPILED RECORD DATA AND BEST FIT ONTO EXISTING IMPROVEMENTS. IT IS POSSIBLE FOR THE LOCATION OF THE SUBJECT PROPERTY TO SHIFT FROM THE PLACEMENT SHOWN HEREON WITH ADDITIONAL FIELD WORK AND RESEARCH. THEREFORE, ANY SPATIAL REFERENCE MADE OR SHOWN BETWEEN THE RELATIONSHIP OF THE BOUNDARY LINES AND EXISTING GROUND FEATURES, EASEMENTS OR LEASE AREA SHOWN HEREON IS INTENDED TO BE APPROXIMATE AND IS SUBJECT TO VERIFICATION BY RESOLVING THE POSITION OF THE BOUNDARY LINES.

VICINITY MAP
NOT TO SCALE

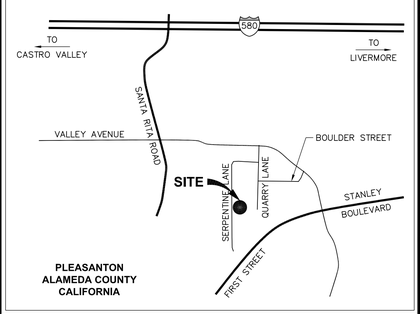

PROPERTY INFORMATION

Owner: JEFFREY MAIN
Address: 6955 SIERRA COURT
DUBLIN, CA 94568

Site: SERPENTINE LANE & QUARRY LANE
Address: 1056 SERPENTINE LANE
PLEASANTON, CA 94566

Assessor's Parcel Number: 946-4547-115 (COMMON AREA)

Height of Building/Tower: N/A

Title Report:
TITLE REPORT FOR THIS PROPERTY WAS PROVIDED BY FIRST AMERICAN TITLE COMPANY, REPORT NO. 0131-61831, DATED AS OF AUGUST 17, 2011.

Legal Description:
PROPERTY SITUATED IN THE CITY OF PLEASANTON, COUNTY OF ALAMEDA, STATE OF CALIFORNIA, BEING PARCEL 'D' AS SHOWN ON THAT CERTAIN PARCEL MAP NO. 4231, FILED FOR RECORD IN BOOK 143 AT PAGE 19, RECORDS OF SAID COUNTY.

FEMA FLOOD ZONE DESIGNATION

National Flood Insurance Program

County: ALAMEDA — Effective Date: AUGUST 3, 2009
Community-Panel Number: 06001C-0336-G
The Flood Zone Designation for this site as plotted by scale is:

X — Areas of 500-year flood; areas of 100-year flood with average deposits of less than 1 foot or drainage areas less than 1 square mile and areas protected by levees from 100 year flood.

SURVEY DATA

NAD 83 Datum:
Lat: N 37°40'18.52" Long: W 121°52'00.42"
Datum Base: NAD 83 Equipment Used: Topcon Hiperlite Receiver (See Note 2)
Site Ground Elevation: 349.0± A.M.S.L. (NAVD 88) AT GPS SITE LOCATION
Basis of Elevations:
GLOBAL POSITIONING SYSTEM (GPS)
(SEE NOTE 2)
Basis of Bearings:
PARCEL MAP 4638 FILED IN BOOK 157 AT PAGE 14 IN THE RECORDS OF ALAMEDA COUNTY, AND TWO FOUND MONUMENTS AS SHOWN.
Date of Field Survey: 09/16/11

NOTES

1.) This is not a boundary survey. This is a specialized topographic map with property lines and easements being a graphic depiction of various information gathered from preliminary title reports, back-up documents of record, maps and available monuments found during the field survey. No property monuments were set. No title research was performed by Quiet River Land Services, Inc.

2.) The latitude, longitude and elevation shown hereon were derived from post-processed L-1/L-2 data collected using Navstar Global Positioning System (GPS) and a Topcon Hiperlite Receiver. Topcon specifications report decimeter level accuracy (horizontally) when data is properly collected and processed. (Elevation = ±3.0 feet.)

3.) Unless otherwise noted, no underground utility locating service company was contacted prior to this map being prepared; therefore, there may be non-visible or obscure utilities existing on the property not shown on this map - so CALL BEFORE YOU DIG.

4.) Any electronic digital media provided by Quiet River Land Services, Inc. to our client is a courtesy and is not to be reproduced, distributed, sold, altered, revised, edited or amended without the express written consent of an Officer of Quiet River Land Services, Inc. Further, only the final stamped, signed and dated original "hard copy" version of our survey or map is considered to be our legally recognized product.

SURVEYOR'S STATEMENT

I, the undersigned, a Registered Professional Land Surveyor licensed under the laws of the State of California do hereby state that the information, measurements, easements, record boundary lines, bearings and distances as shown hereon are based upon a field survey as dated above and upon items of public record and data contained in a title report, as referenced. Furthermore, the Latitude and Longitude coordinates are reported in NAD 83 Datum and are accurate to within ±15 feet horizontally, and the ground elevation, reported in NAVD 1988 Datum, is within ±3 feet vertically. The coordinate values and elevations are within the 1-A Accuracy Code designation as listed in the A.S.A.C. Information Sheet 91:003 and are accurate to the best of my knowledge and belief.

SIGNATURE DATE

LEGEND

APN:	ASSESSOR'S PARCEL NUMBER		ASPHALT
CP	CONTROL POINT		CONCRETE
EL.	ELEVATION		
FH	FIRE HYDRANT	△	CONTROL POINT
FND.	FOUND	○	FOUND MONUMENT
HT.	HEIGHT		GPS POINT
MON.	MONUMENT		
(M-M)	MONUMENT TO MONUMENT	P 15.3 / R 12.3	PARAPET/ROOF ELEVATIONS
P.O.B.	POINT OF BEGINNING		
P.O.C.	POINT OF COMMENCEMENT	× 12.3	SPOT ELEVATION
PP	POWER POLE		TEMPORARY BENCHMARK
(TYP.)	TYPICAL		

DATE: 01/22/13
DRAWN BY: MAS
FILE NO.: PEEK1105

REVISIONS

DATE	DESCRIPTION	INITIAL
11/15/11	MOVE SITE LOCATION	MAS
07/16/12	TITLE REPORT	MAS
07/31/12	MOVE SITE LOCATION	MAS
08/21/12	SHOW NEAREST RESIDENTIAL	MAS
10/29/12	NEW RADIAL LINE	MAS
12/28/12	CHANGE STIE NAME & NUMBER	MAS
01/03/13	ADDITIONAL SURVEY OF TREES	MAS
01/22/13	OWNER INFORMATION - REV. 9	MAS

at&t
AT&T MOBILITY
4430 Rosewood Drive
Pleasanton, CA 94588

QUIET RIVER
Land Services Inc.
2340 Santa Rita Road, Suite 9
Pleasanton, CA 94566
(925) 734-6788 Phone
(925) 734-6732 Fax

EXISTING SITE CONDITIONS

CCU4243
SERPENTINE LANE
& QUARRY LANE
1056 SERPENTINE LANE
PLEASANTON, CA 94566

C1
OF 1 SHEET

C:\Land Projects 2008\PEEK1105\dwg\PEEK1105SV1-REV.dwg Jan, 22, 2013 - 10:06am user

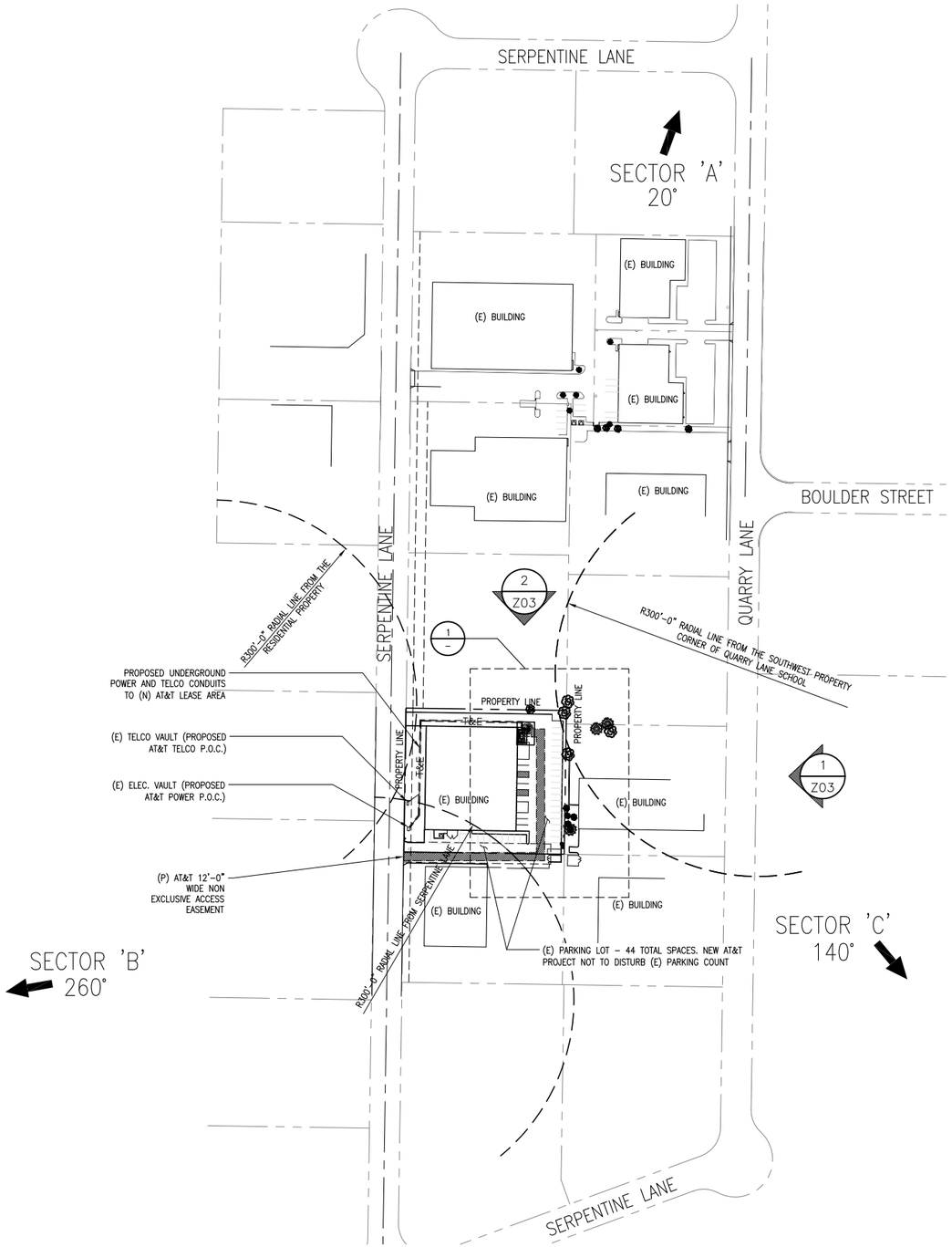

SITE PLAN

0 50' 100' SCALE: 1"=100'-0" 2

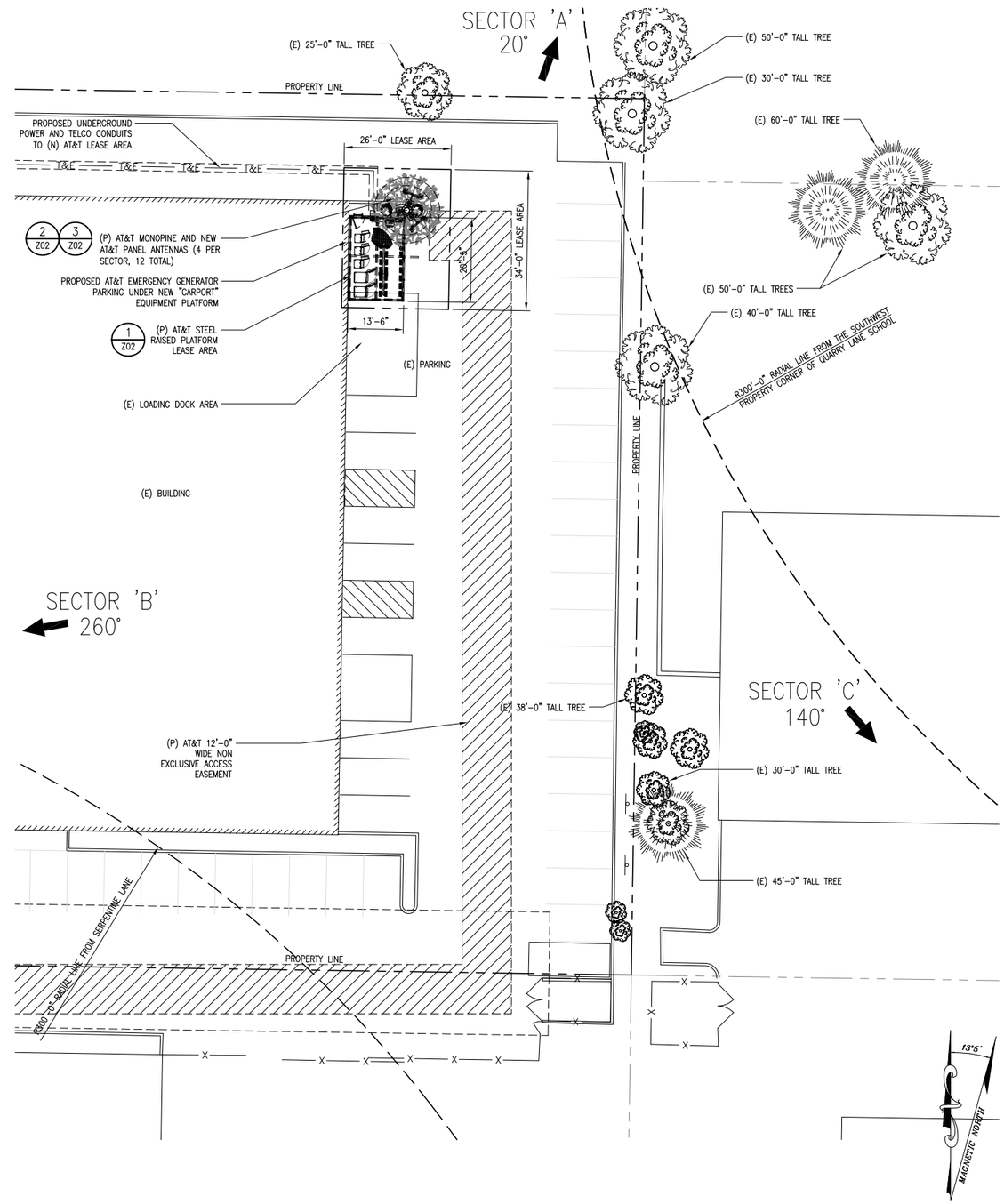

ENLARGED SITE PLAN

0 8' 16' SCALE: 1/16"=1'-0" 1

Copyright © Bechtel Corporation 2011. This item contains confidential information proprietary to Bechtel that is not to be used, disclosed, or reproduced in any format by any non-Bechtel party without Bechtel's prior written permission. Notwithstanding the above, "AT&T Mobility" has the right to use the information contained in this document pursuant to Contract 25471 between Bechtel Corporation and "AT&T Mobility". All rights reserved.

CDG
CONNELL DESIGN GROUP, LLC
ENGINEERING AND DESIGN
26455 RANCHO PARKWAY SOUTH, LAKE FOREST, CA 92630
(949) 753-8807 OFFICE - (949) 753-8833 FAX

SERPENTINE LANE & QUARRY LANE
CCU4243
1056 SERPENTINE LANE
PLEASANTON, CA 94566

at&t
4430 ROSEWOOD DRIVE, BLDG. # 3, 2ND FLOOR,
PLEASANTON, CA 94588

NO.	DATE	REVISIONS	BY	CHK	APP'D
1	01/09/13	PLANNING COMMENTS	JPC	JPC	JPC
0	07/31/12	ZD FOR SUBMITTAL	JPC	JPC	JPC

SCALE: AS NOTED | DESIGNED BY: | DRAWN BY: XX

TITLE SHEET

SITE PLAN, ENLARGED SITE PLAN

JOB NUMBER	DRAWING NUMBER	SHEET NO.	REV
25736-635-AA	TL-CCU4243	Z01	1

CDG NO. 12-6-CC4243 22 x 34 "D" SIZE

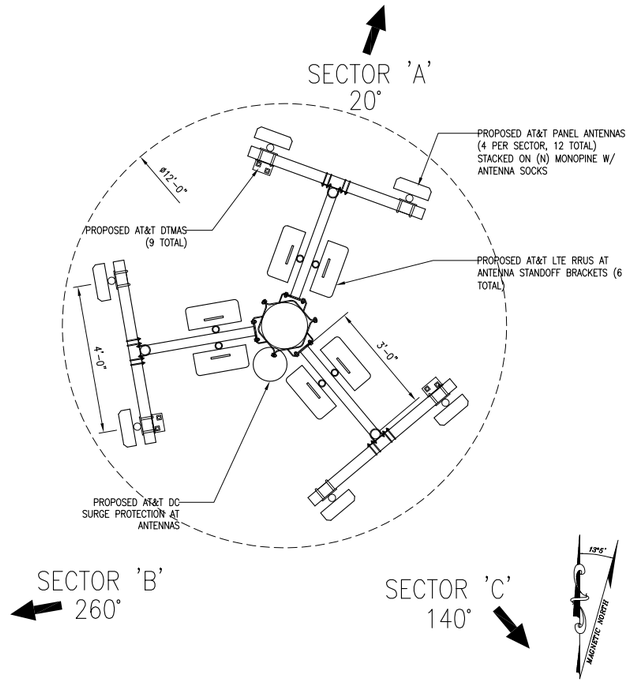

PROPOSED ANTENNA LAYOUT @ 52' RAD CENTER SCALE: 1/2"=1'-0" 0 1' 2' **2**

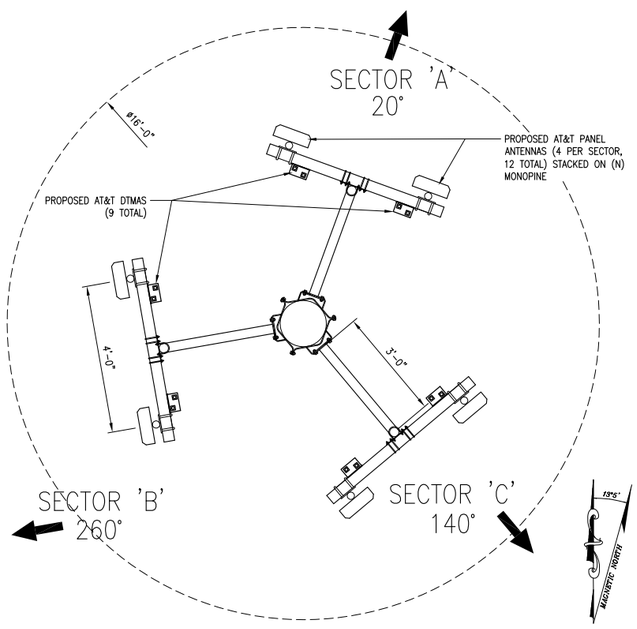

PROPOSED ANTENNA LAYOUT @ 44' RAD CENTER SCALE: 1/2"=1'-0" 0 1' 2' **3**

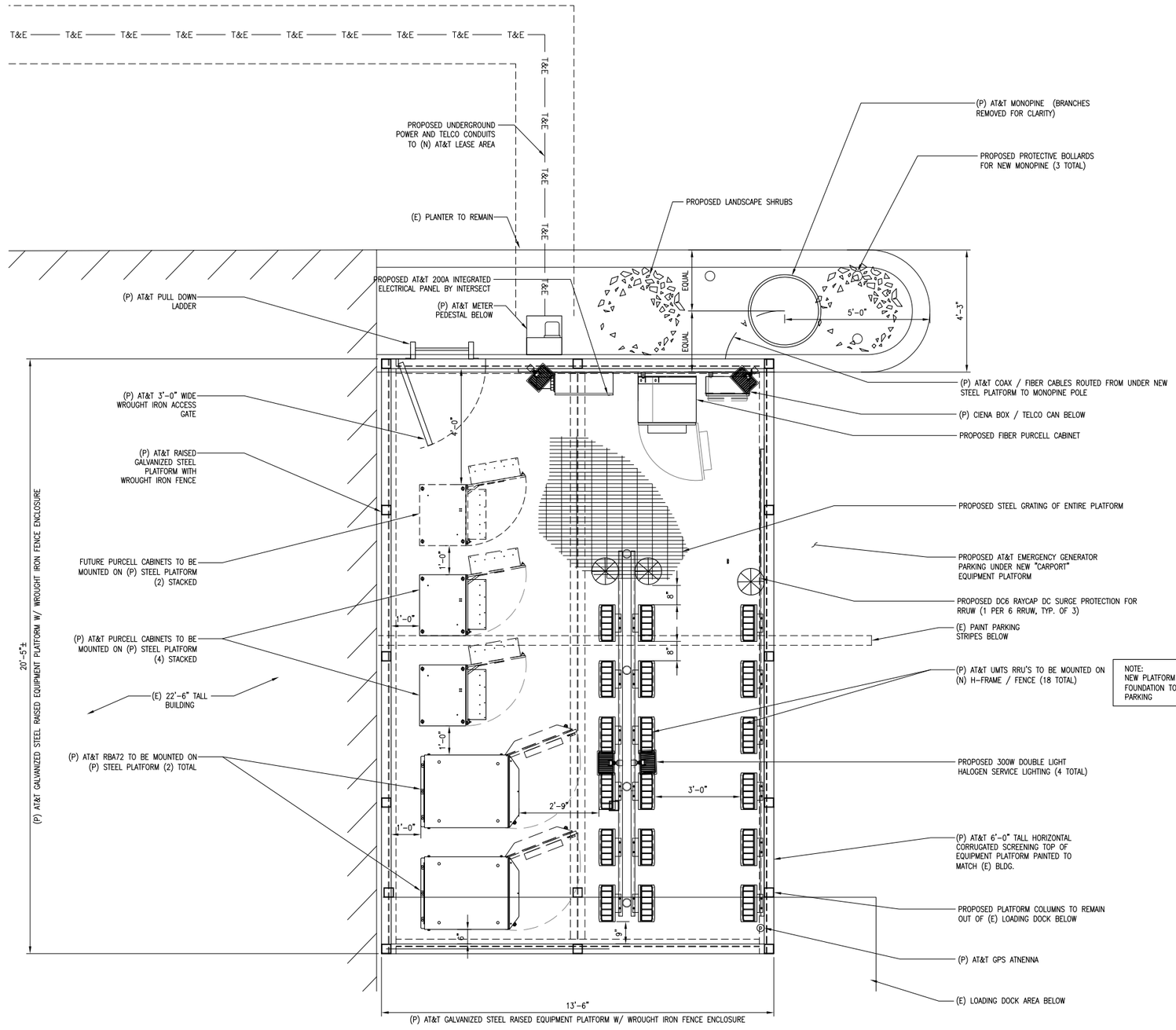

NOTE:
NEW PLATFORM SUPPORT COLUMNS AND FOUNDATION TO REMAIN CLEAR OF (E) PARKING

PROPOSED EQUIPMENT LAYOUT 0 1' 2' SCALE: 1/2"=1'-0" **1**

Copyright © Bechtel Corporation 2011. This item contains confidential information proprietary to Bechtel that is not to be used, disclosed, or reproduced in any format by any non-Bechtel party without Bechtel's prior written permission. Notwithstanding the above, "AT&T Mobility" has the right to use the information contained in this document pursuant to Contract 25471 between Bechtel Corporation and "AT&T Mobility". All rights reserved.

CONNELL DESIGN GROUP, LLC
ENGINEERING AND DESIGN
26455 RANCHO PARKWAY SOUTH, LAKE FOREST, CA 92630
(949) 753-8807 OFFICE - (949) 753-8833 FAX

SERPENTINE LANE & QUARRY LANE
CCU4243
1056 SERPENTINE LANE
PLEASANTON, CA 94566

at&t
4430 ROSEWOOD DRIVE, BLDG. # 3, 2ND FLOOR,
PLEASANTON, CA 94588

NO.	DATE	REVISIONS	BY	CHK	APP'D
1	01/09/13	PLANNING COMMENTS	JPC	JPC	JPC
0	07/31/12	ZD FOR SUBMITTAL	JPC	JPC	JPC

SCALE: AS NOTED | DESIGNED BY: | DRAWN BY: XX

TITLE SHEET

ANTENNA LAYOUT AND EQUIPMENT LAYOUT

JOB NUMBER	DRAWING NUMBER	SHEET NO.	REV
25736-635-AA	TL-CCU4243	Z02	1

CDG NO. 12-6-CC4243 22 x 34 "D" SIZE

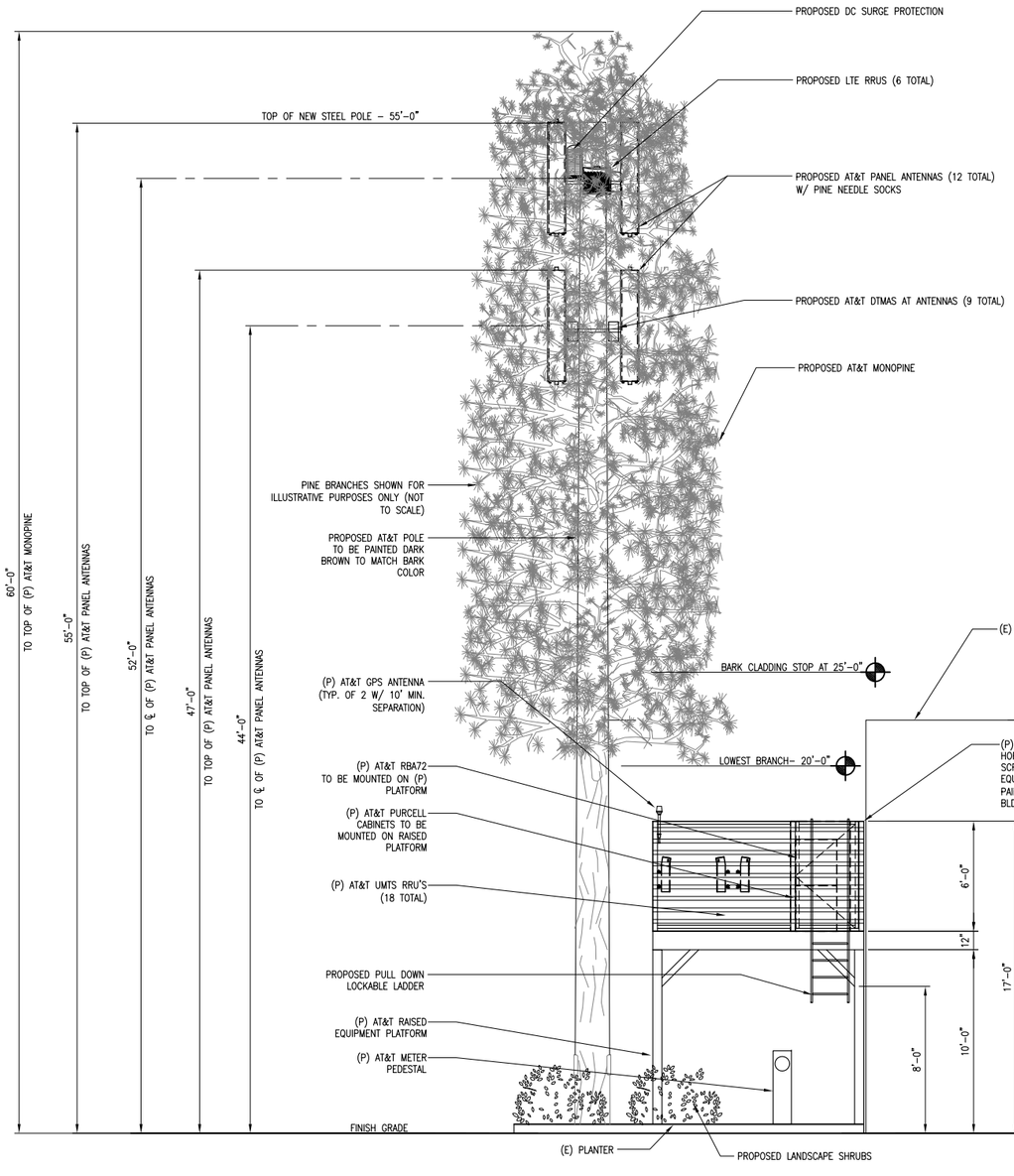

PROPOSED NORTH ELEVATION SCALE: 1/4"=1'-0" (0 2' 4') **2**

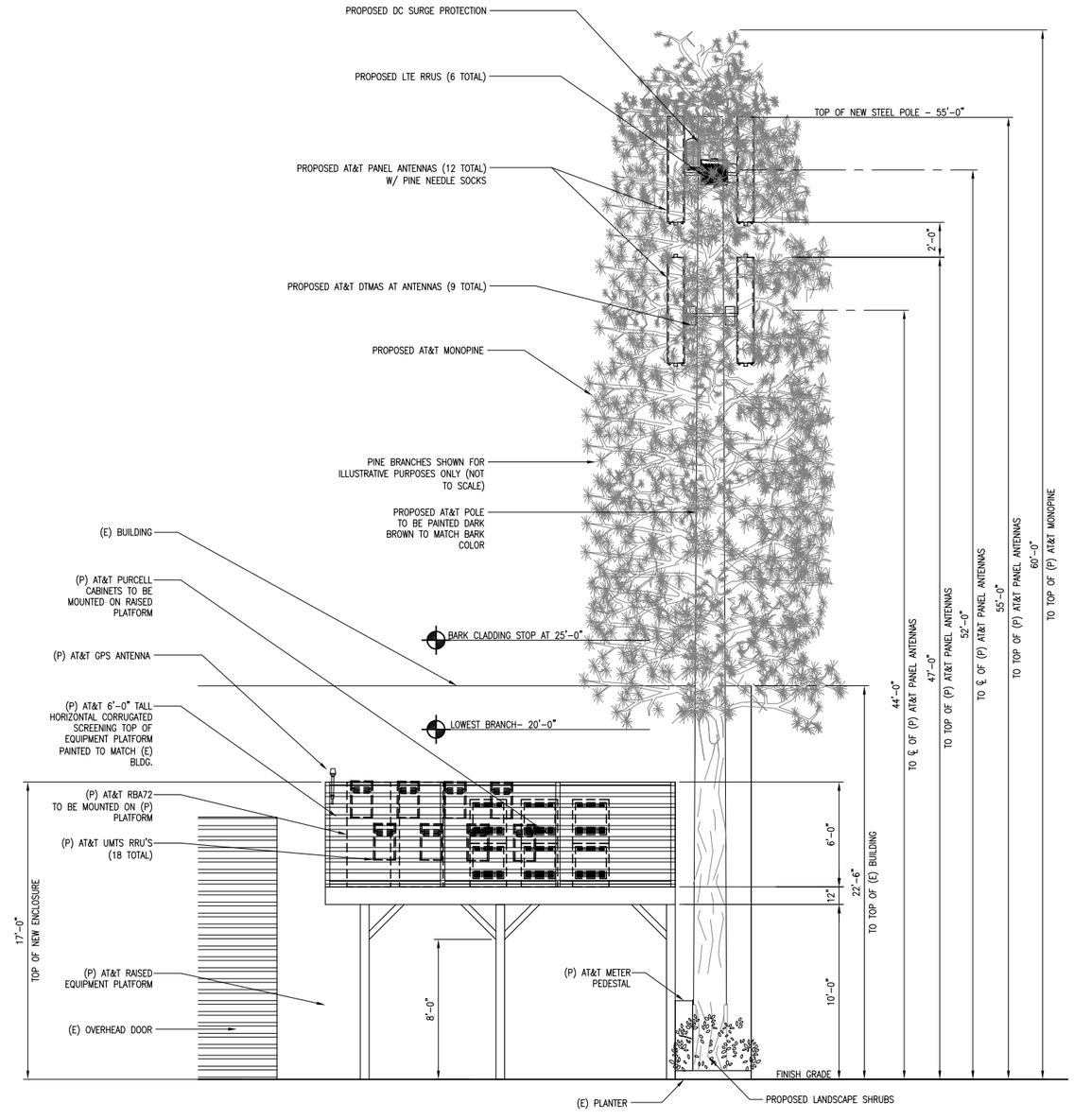

PROPOSED EAST ELEVATION SCALE: 1/4"=1'-0" (0 2' 4') **1**

Copyright © Bechtel Corporation 2011. This item contains confidential information proprietary to Bechtel that is not to be used, disclosed, or reproduced in any format by any non-Bechtel party without Bechtel's prior written permission. Notwithstanding the above, "AT&T Mobility" has the right to use the information contained in this document pursuant to Contract 25471 between Bechtel Corporation and "AT&T Mobility". All rights reserved.

CONNELL DESIGN GROUP, LLC
ENGINEERING AND DESIGN
26455 RANCHO PARKWAY SOUTH, LAKE FOREST, CA 92630
(949) 753-8807 OFFICE - (949) 753-8833 FAX

SERPENTINE LANE & QUARRY LANE
CCU4243
1056 SERPENTINE LANE
PLEASANTON, CA 94566

at&t
4430 ROSEWOOD DRIVE, BLDG. # 3, 2ND FLOOR,
PLEASANTON, CA 94588

NO.	DATE	REVISIONS	BY	CHK	APP'D
1	01/09/13	PLANNING COMMENTS	JPC	JPC	JPC
0	07/31/12	ZD FOR SUBMITTAL	JPC	JPC	JPC

SCALE: AS NOTED | DESIGNED BY: | DRAWN BY: XX

TITLE SHEET
ELEVATIONS

JOB NUMBER	DRAWING NUMBER	SHEET NO.	REV
25736-635-AA	TL-CCU4243	Z03	1

CDG NO. 12-6-CC4243 22 x 34 "D" SIZE

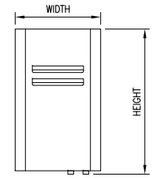

RRUS01 & RRUW
W/ SOLAR SHIELD

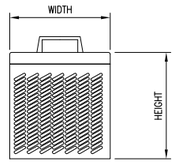

RRUS 11

SIZE AND WEIGHT TABLE

RRUS	WIDTH	DEPTH	HEIGHT W/O CABLE MANAGEMENT COVER	WEIGHT W/O BRACKET
RRUS01/RRUW WITHOUT SOLAR SHIELD	13.8"	4.4"	23.6"	39 LBS.
RRUS01/RRUW WITH SOLAR SHIELD	15.1"	6.7"	25.0"	44 LBS.
RRUS11 (700 MHz) WITHOUT SOLAR SHIELD	16.3"	5.8"	15.8"	44 LBS.
RRUS11 (700 MHz) SOLAR SHIELD	17.3"	7.2"	17.8"	50 LBS.
RRUS11 (AWS 1700/2100M MHz) SOLAR SHIELD	16.3"	5.8"	15.8"	50 LBS.
RRUS11 (AWS 1700/2100M MHz) SOLAR SHIELD	17.3"	7.2"	17.8"	44 LBS.

MINIMUM CLEARANCE TABLE FOR RRUS01/RRUW–INSTALL PER MANUFACTURER SPECIFICATIONS

RRU CABINET	CLEARANCES (INCHES)	COMMENTS
FRONT	36"	INSTALLATION ACCESS
REAR	0"	ZERO REAR CLEARANCE IS ALLOWED USING SUPPLIED MOUNTING BRACKETS
RIGHT	8"	FROM SOLAR SHIELD
LEFT	8"	FROM SOLAR SHIELD
ABOVE/TOP	16"	FROM CEILING FOR AIR FLOW (NOTE1)
BOTTOM	12"	CONDUIT ROUTING/AIR FLOW

NOTES:

1. NO PAINTING OF RRU OR THE SOLAR SHIELD IS ALLOWED

MINIMUM CLEARANCE TABLE FOR RRUS01/RRUW–INSTALL PER MANUFACTURER SPECIFICATIONS

RRU CABINET	CLEARANCES (INCHES)	COMMENTS
FRONT	36"	INSTALLATION ACCESS
REAR	0"	ZERO REAR CLEARANCE IS ALLOWED USING SUPPLIED MOUNTING BRACKETS
RIGHT	8"	AIR FLOW
LEFT	8"	AIR FLOW
ABOVE/TOP	16"	AIR FLOW
BOTTOM	12"	CONDUIT ROUTING/AIR FLOW

ERICSSON
REMOTE RADIO UNIT (RRU)

DETAIL 1131 / – 2
NTS

RRU DETAIL

SCALE: N.T.S. 1

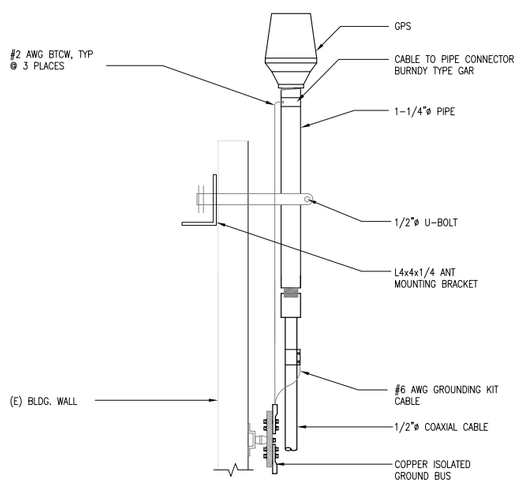

GPS ANTENNA DETAIL

SCALE: N.T.S. 4

NOTES:

1. RAYCAP VIA AT&T SUPPLIES THE DC6 OVER VOLTAGE PROTECTOR AND PIPE MOUNTING BRACKETS. SUBCONTRACTOR SHALL SUPPLY THE PIPE.

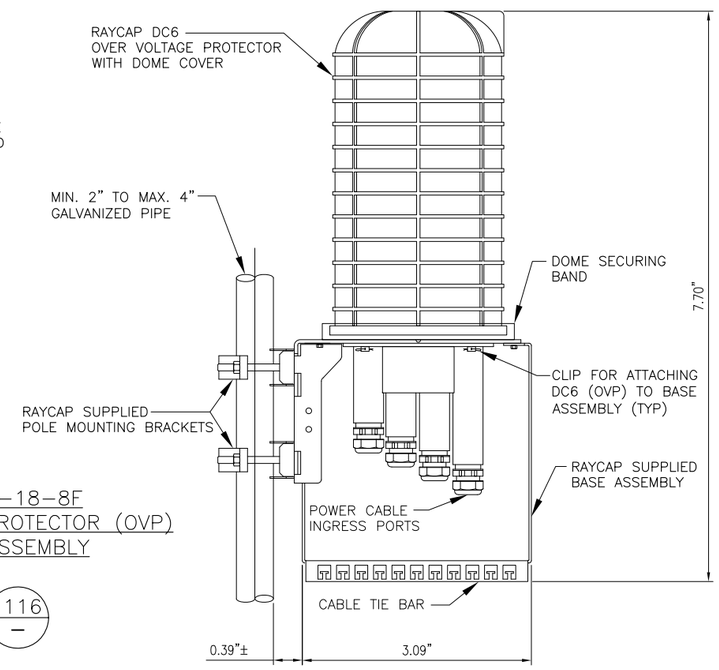

RAYCAP DC6–48–60–18–8F
DC POWER OVER VOLTAGE PROTECTOR (OVP)
POLE MOUNT BASE ASSEMBLY

DETAIL 1116 / –
NTS

DC SURGE PROTECTION

SCALE: N.T.S. 3

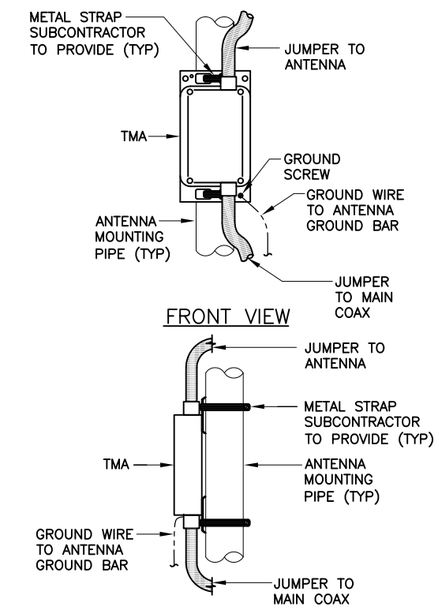

SIDE VIEW

TMA MOUNTING DETAIL

DETAIL 1504 / –
NTS

TMA DETAIL

SCALE: N.T.S. 2

CONNELL DESIGN GROUP, LLC
ENGINEERING AND DESIGN
26455 RANCHO PARKWAY SOUTH, LAKE FOREST, CA 92630
(949) 753-8807 OFFICE - (949) 753-8833 FAX

SERPENTINE LANE & QUARRY LANE
CCU4243
1056 SERPENTINE LANE
PLEASANTON, CA 94566

at&t
4430 ROSEWOOD DRIVE, BLDG. # 3, 2ND FLOOR,
PLEASANTON, CA 94588

NO.	DATE	REVISIONS	BY	CHK	APP'D
1	01/09/13	PLANNING COMMENTS	JPC	JPC	JPC
0	07/31/12	ZD FOR SUBMITTAL	JPC	JPC	JPC

SCALE: AS NOTED | DESIGNED BY: | DRAWN BY: XX

TITLE SHEET

DETAILS

JOB NUMBER	DRAWING NUMBER	SHEET NO.	REV
25736–635–AA	TL–CCU4243	D01	1

CDG NO. 12-6-CC4243 22 x 34 "D" SIZE

Copyright © Bechtel Corporation 2011. This item contains confidential information proprietary to Bechtel that is not to be used, disclosed, or reproduced in any format by any non-Bechtel party without Bechtel's prior written permission. Notwithstanding the above, "AT&T Mobility" has the right to use the information contained in this document pursuant to Contract 25471 between Bechtel Corporation and "AT&T Mobility". All rights reserved.

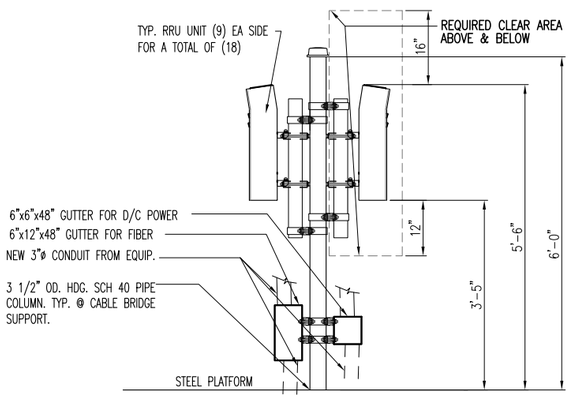

RRU H-FRAME SECTION

SCALE: N.T.S. **4**

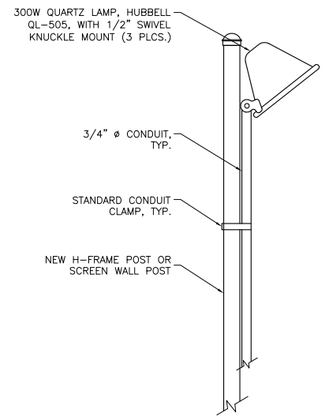

HALOGEN LIGHTING DETAIL

SCALE: N.T.S. **2**

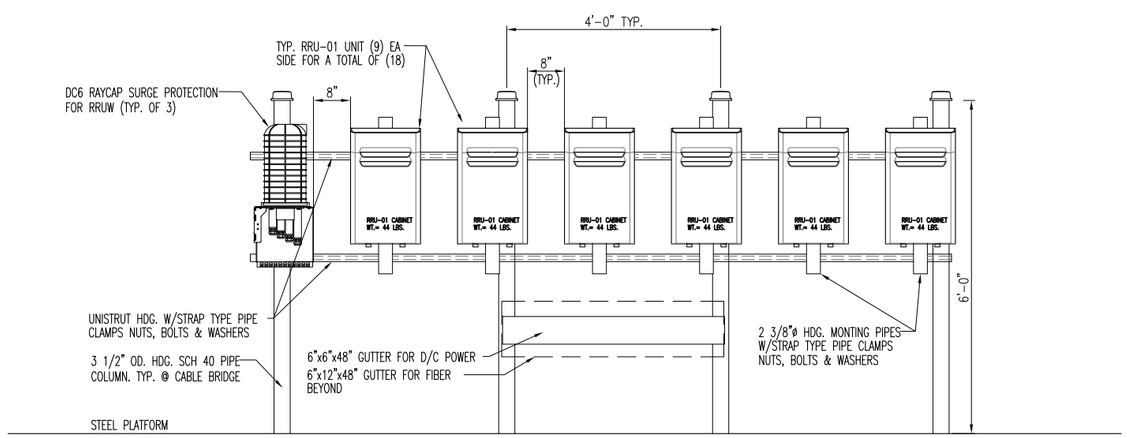

RRU H-FRAME ELEVATION

SCALE: N.T.S. **3**

SECTOR	AZIMUTH		ANTENNA MAKE/MODEL NO./SIZE	RAD CENTER HEIGHT (AGL.)	TMA	RRU	FIBER LENGTH	COAX LENGTH	COAX DIAMETER
ALPHA	1	20°	SBNH-1D6565B ANDREW 72.7"Hx11.9"Wx7.1"D	52'-0"	N/A	(1) RRUS-11-700 (1) RRUS-11-AWS	65'±	10'	1/2"ø
	2	20°	SBNH-1D6565B ANDREW 72.7"Hx11.9"Wx7.1"D	52'-0"	DTMA	(1) RRUW-01-1960 (1) RRUW-01-1960 (FUTURE)	20'±	65'±	7/8"ø
	3	20°	SBNH-1D6565B ANDREW 72.7"Hx11.9"Wx7.1"D	44'-0"	DTMA	(1) RRUW-01-0860 (1) RRUW-01-1960	20'±	57'±	7/8"ø
	4	20°	SBNH-1D6565B ANDREW 72.7"Hx11.9"Wx7.1"D	44'-0"	DTMA	(1) RRUW-01-0860 (1) RRUW-01-1960	20'±	57'±	7/8"ø
BETA	1	260°	SBNH-1D6565B ANDREW 72.7"Hx11.9"Wx7.1"D	52'-0"	N/A	(1) RRUS-11-700 (1) RRUS-11-AWS	65'±	10'	1/2"ø
	2	260°	SBNH-1D6565B ANDREW 72.7"Hx11.9"Wx7.1"D	52'-0"	DTMA	(1) RRUW-01-1960 (1) RRUW-01-1960 (FUTURE)	20'±	65'±	7/8"ø
	3	260°	SBNH-1D6565B ANDREW 72.7"Hx11.9"Wx7.1"D	44'-0"	DTMA	(1) RRUW-01-0860 (1) RRUW-01-1960	20'±	57'±	7/8"ø
	4	260°	SBNH-1D6565B ANDREW 72.7"Hx11.9"Wx7.1"D	44'-0"	DTMA	(1) RRUW-01-0860 (1) RRUW-01-1960	20'±	57'±	7/8"ø
GAMMA	1	140°	SBNH-1D6565B ANDREW 72.7"Hx11.9"Wx7.1"D	52'-0"	N/A	(1) RRUS-11-700 (1) RRUS-11-AWS	65'±	10'	1/2"ø
	2	140°	SBNH-1D6565B ANDREW 72.7"Hx11.9"Wx7.1"D	52'-0"	DTMA	(1) RRUW-01-1960 (1) RRUW-01-1960 (FUTURE)	20'±	65'±	7/8"ø
	3	140°	SBNH-1D6565B ANDREW 72.7"Hx11.9"Wx7.1"D	44'-0"	DTMA	(1) RRUW-01-0860 (1) RRUW-01-1960	20'±	57'±	7/8"ø
	4	140°	SBNH-1D6565B ANDREW 72.7"Hx11.9"Wx7.1"D	44'-0"	DTMA	(1) RRUW-01-0860 (1) RRUW-01-1960	20'±	57'±	7/8"ø

NOTES:

1. ALL MATERIALS ON THE ABOVE TABLE SHALL BE PROVIDED BY THE AT&T WIRELESS TO THE CONTRACTOR FOR INSTALLATION.
2. CONTRACTOR SHALL AS-BUILT CABLE LENGTHS AND PROVIDE ANTENNA SERIAL NUMBERS ON RED-LINED DRAWINGS.
3. COAX GROUND KITS, COAX WEATHER PROOFING, SNAP-IN HANGER CLAMPS AND HOISTING GRIPS SHALL BE PROVIDED BY THE AT&T WIRELESS TO THE CONTRACTOR FOR INSTALLATION.
4. CONTRACTOR MUST ALSO INSTALL THE COAXIAL CABLES FOR THE FUTURE ANTENNAS.
5. CONTRACTOR TO REFER TO B.O.M. AND RF BUILD SHEET FOR NUMBER AND TYPE OF ANTENNA(S) TO INSTALL.

ANTENNA SCHEDULE

SCALE: N.T.S. **1**

CONNELL DESIGN GROUP, LLC
ENGINEERING AND DESIGN
26455 RANCHO PARKWAY SOUTH, LAKE FOREST, CA 92630
(949) 753-8807 OFFICE - (949) 753-8833 FAX

SERPENTINE LANE & QUARRY LANE
CCU4243
1056 SERPENTINE LANE
PLEASANTON, CA 94566

at&t
4430 ROSEWOOD DRIVE, BLDG. # 3, 2ND FLOOR,
PLEASANTON, CA 94588

NO.	DATE	REVISIONS	BY	CHK	APP'D
1	01/09/13	PLANNING COMMENTS	JPC	JPC	JPC
0	07/31/12	ZD FOR SUBMITTAL	JPC	JPC	JPC

SCALE: AS NOTED | DESIGNED BY: | DRAWN BY: XX

TITLE SHEET

FENCE DETAILS, NOTES

JOB NUMBER	DRAWING NUMBER	SHEET NO.	REV
25736-635-AA	TL-CCU4243	D02	1

CDG NO. 12-6-CC4243 22 x 34 "D" SIZE

Copyright © Bechtel Corporation 2011. This item contains confidential information proprietary to Bechtel that is not to be used, disclosed, or reproduced in any format by any non-Bechtel party without Bechtel's prior written permission. Notwithstanding the above, "AT&T Mobility" has the right to use the information contained in this document pursuant to Contract 25471 between Bechtel Corporation and "AT&T Mobility". All rights reserved.

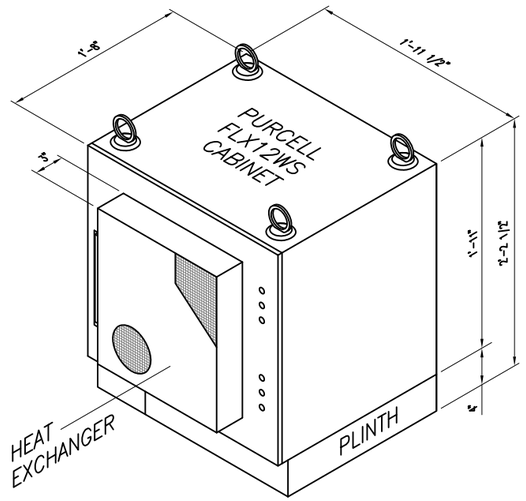

NOTES:

1. MAXIMUM WEIGHT WITH EQUIPMENT = 150lbs.
2. ATTACH CABINET TO EXISTING STEEL PLATFORM USING 1/2"ø BOLTS/J-BOLTS.
3. AN ISOLATOR BASE IS REQUIRED WHEN MOUNTING DIRECTLY ON CONCRETE PAD.

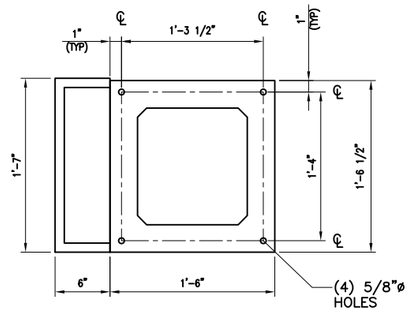

BOLT HOLE PATTERN

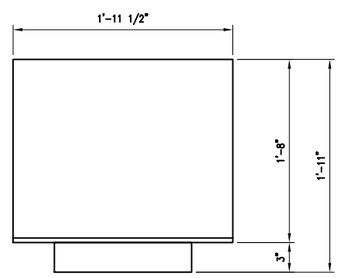

PLAN

PURCELL FLX12WS CABINET
WITH HEAT EXCHANGER

DETAIL 1108 / – 1
NTS

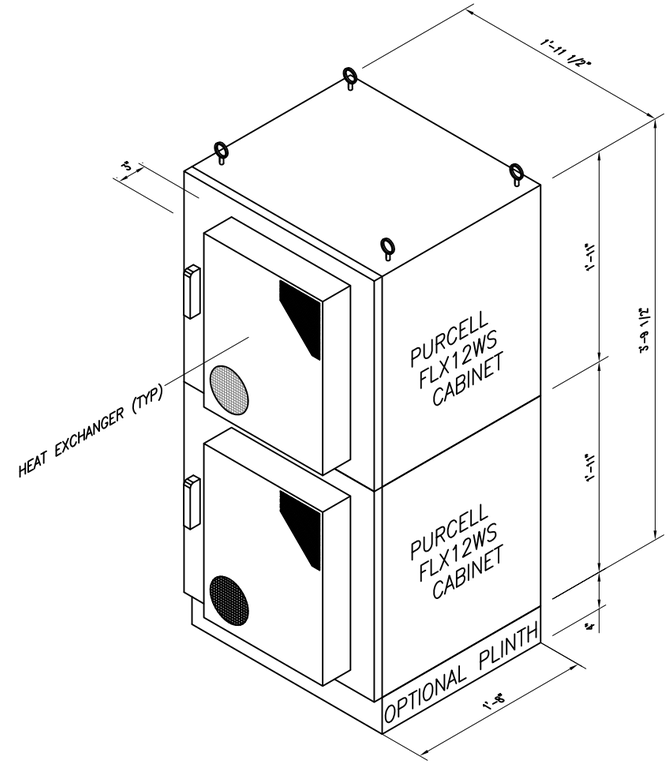

NOTES:

1. MAXIMUM WEIGHT WITH EQUIPMENT = 310lbs.
2. ATTACH CABINET TO EXISTING STEEL PLATFORM USING 1/2"ø BOLTS/J-BOLTS.
3. AN ISOLATOR BASE IS REQUIRED WHEN MOUNTING DIRECTLY ON CONCRETE PAD.
4. REFER TO MANUFACTURER'S SPECIFICATIONS FOR STACKING AND CONNECTING CABINETS

PURCELL FLX12WS CABINET
W/HEAT EXCHANGERS
STACKED CONFIGURATION

DETAIL 1108B / –
NTS

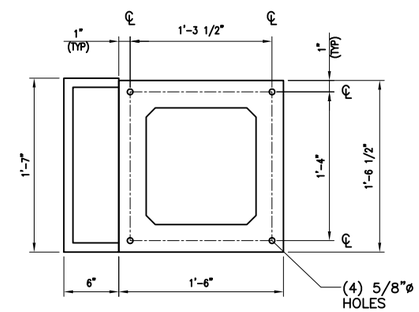

BOLT HOLE PATTERN

BATTERY PEDESTAL
BOLT PATTERN

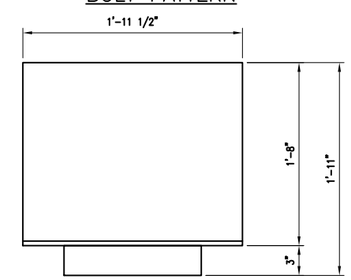

PLAN

CABINET DETAIL

SCALE: N.T.S. | 1

CONNELL DESIGN GROUP, LLC
ENGINEERING AND DESIGN
26455 RANCHO PARKWAY SOUTH, LAKE FOREST, CA 92630
(949) 753-8807 OFFICE - (949) 753-8833 FAX

SERPENTINE LANE & QUARRY LANE
CCU4243
1056 SERPENTINE LANE
PLEASANTON, CA 94566

at&t
4430 ROSEWOOD DRIVE, BLDG. # 3, 2ND FLOOR,
PLEASANTON, CA 94588

NO.	DATE	REVISIONS	BY	CHK	APP'D
1	01/09/13	PLANNING COMMENTS	JPC	JPC	JPC
0	07/31/12	ZD FOR SUBMITTAL	JPC	JPC	JPC

SCALE: AS NOTED | DESIGNED BY: | DRAWN BY: XX

TITLE SHEET

EQUIPMENT CABINET DETAIL

JOB NUMBER	DRAWING NUMBER	SHEET NO.	REV
25736-635-AA	TL-CCU4243	D03	1

CDG NO. 12-6-CC4243 22 x 34 "D" SIZE

Copyright © Bechtel Corporation 2011. This item contains confidential information proprietary to Bechtel that is not to be used, disclosed, or reproduced in any format by any non-Bechtel party without Bechtel's prior written permission. Notwithstanding the above, "AT&T Mobility" has the right to use the information contained in this document pursuant to Contract 25471 between Bechtel Corporation and "AT&T Mobility". All rights reserved.

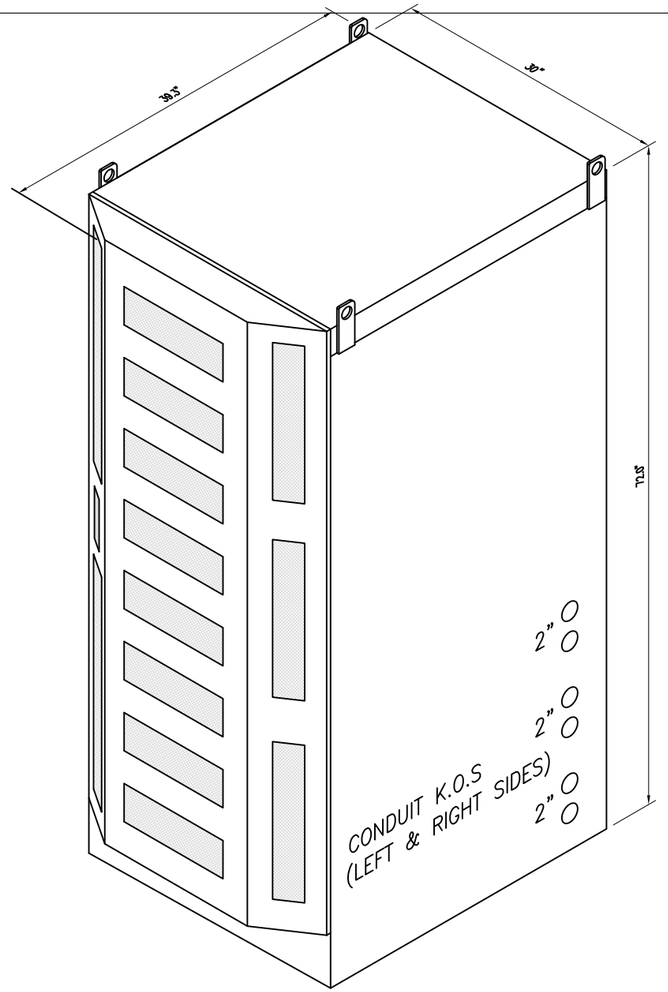

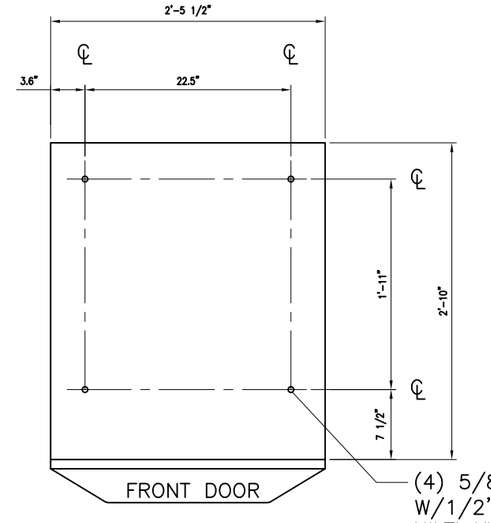

DRILL PATTERN

(4) 5/8"ø HOLES W/1/2"ø x 5 1/2" LG HILTI KWIK BOLT TZ (GALVANIZED) EXPANSION ANCHORS

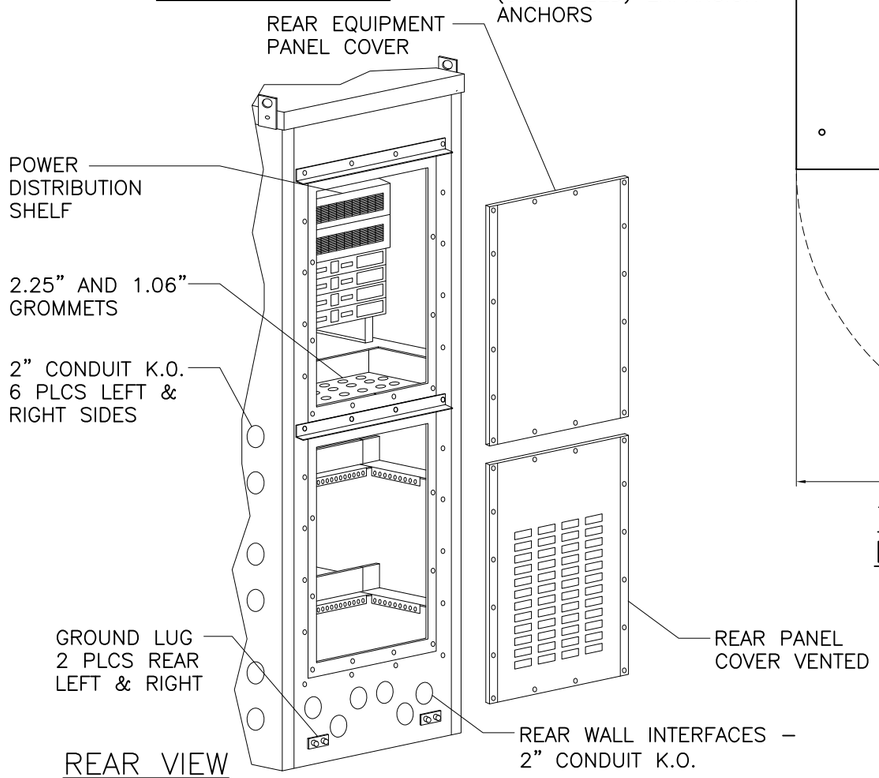

REAR VIEW

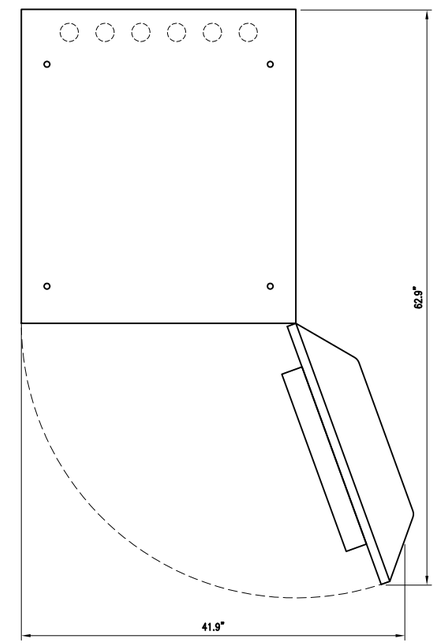

TOP VIEW 110° DOOR OPENING

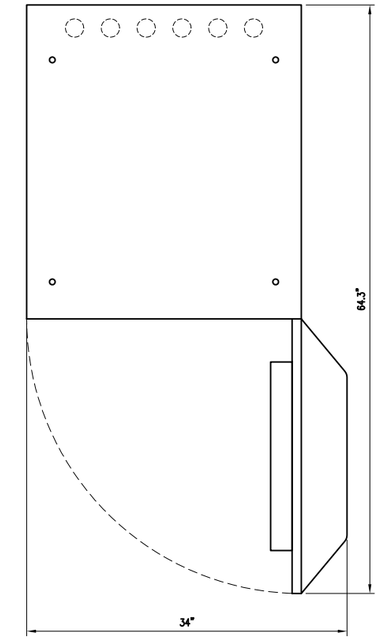

TOP VIEW 90° DOOR OPENING

CLEARANCE TABLE	
FRONT = 36"	LEFT = 0"
REAR = 36"	RIGHT = 0"

WEIGHT = 425lbs (EMPTY)
= 1900lbs (W/12 155AH BTRYS, DC POWER PLANT, 3 RECTIFIERS & CUSTOMER EQUIP.)

COMMSCOPE 48V DC POWER CABINET RBA72 PSV

DETAIL 1190B
NTS –

EQUIPMENT CABINET DETAIL

SCALE: N.T.S. 1

CDG
CONNELL DESIGN GROUP, LLC
ENGINEERING AND DESIGN
26455 RANCHO PARKWAY SOUTH, LAKE FOREST, CA 92630
(949) 753-8807 OFFICE - (949) 753-8833 FAX

SERPENTINE LANE & QUARRY LANE
CCU4243
1056 SERPENTINE LANE
PLEASANTON, CA 94566

at&t
4430 ROSEWOOD DRIVE, BLDG. # 3, 2ND FLOOR,
PLEASANTON, CA 94588

NO.	DATE	REVISIONS	BY	CHK	APP'D
1	01/09/13	PLANNING COMMENTS	JPC	JPC	JPC
0	07/31/12	ZD FOR SUBMITTAL	JPC	JPC	JPC

SCALE: AS NOTED | DESIGNED BY: | DRAWN BY: XX

TITLE SHEET
EQUIPMENT CABINET DETAIL

JOB NUMBER	DRAWING NUMBER	SHEET NO.	REV
25736-635-AA	TL-CCU4243	D04	1

CDG NO. 12-6-CC4243 22 x 34 "D" SIZE

Copyright © Bechtel Corporation 2011. This item contains confidential information proprietary to Bechtel that is not to be used, disclosed, or reproduced in any format by any non-Bechtel party without Bechtel's prior written permission. Notwithstanding the above, "AT&T Mobility" has the right to use the information contained in this document pursuant to Contract 25471 between Bechtel Corporation and "AT&T Mobility". All rights reserved.

CC4243

SERPENTINE LANE & QUARRY LANE
1056 SERPENTINE LANE
PLEASANTON, CA 94566

at&t

View #: 1

July 09, 2013

Location

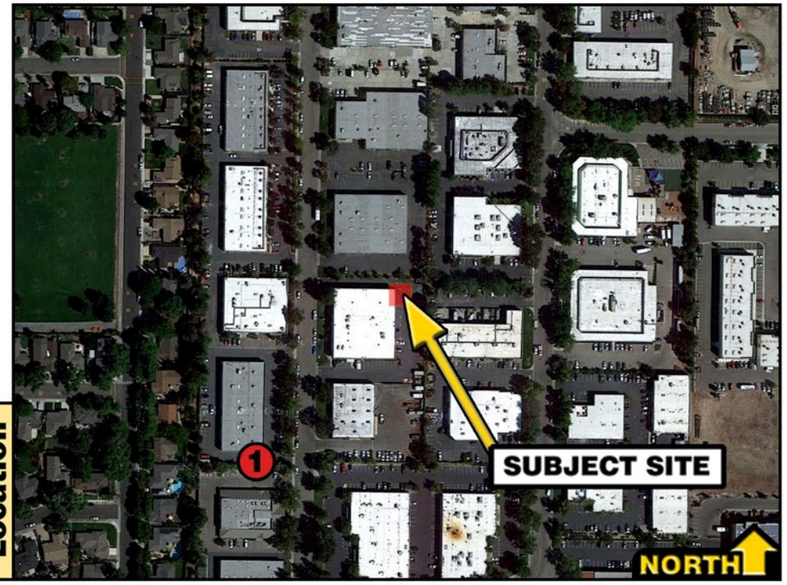

Existing

Proposed

The illustration above is a representation of the proposed project based on information provided by the client. Actual construction may vary dependent on approved construction plans and therefore PTS (Pacific Telecom Services) is not responsible for any post production design changes. Monotree disclaimer: (In the event that the proposed installation includes a monotree) The proposed installation is an artistic representation of a tree, and not intended to be an exact reproduction of an actual living tree. The final installation will have cables, cable ports, and various attachments, such as antennas, nuts, and bolts. While every effort will be made to disguise these components, they will not be readily apparent to the casual observer or passerby. However, upon close scrutiny, the true nature of the installation will be apparent.

AT&T Mobility
4430 Rosewood Drive
Pleasanton, CA 94588

Radha Sharma - Email: rsharma@fmhc.com

Prepared by: CJL

PTS
Pacific Telecom Services, LLC
3199 C Airport Loop Drive, Costa Mesa, CA 92626-3414

REV: A

CC4243

SERPENTINE LANE & QUARRY LANE
1056 SERPENTINE LANE
PLEASANTON, CA 94566

at&t

View #: 2

July 09, 2013

Location

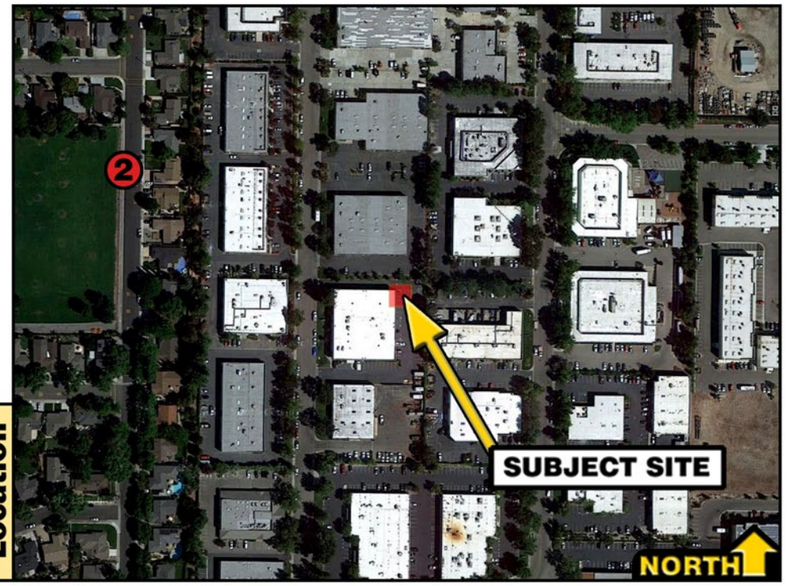

Existing

Proposed

The illustration above is a representation of the proposed project based on information provided by the client. Actual construction may vary dependent on approved construction plans and therefore PTS (Pacific Telecom Services) is not responsible for any post production design changes. Monotree disclaimer: (In the event that the proposed installation includes a monotree) The proposed installation is an artistic representation of a tree, and not intended to be an exact reproduction of an actual living tree. The final installation will have cables, cable ports, and various attachments, such as antennas, nuts, and bolts. While every effort will be made to disguise these components, they will not be readily apparent to the casual observer or passerby. However, upon close scrutiny, the true nature of the installation will be apparent.

AT&T Mobility
4430 Rosewood Drive
Pleasanton, CA 94588

Radha Sharma - Email: rsharma@fmhc.com

Prepared by: CJL

PTS
Pacific Telecom Services, LLC
3199 C Airport Loop Drive, Costa Mesa, CA 92626-3414

REV: A

CC4243

Quarry Lane

1056 Serpentine Lane Pleasanton CA 94566

AEsims.com
877.9AE.sims

View 1

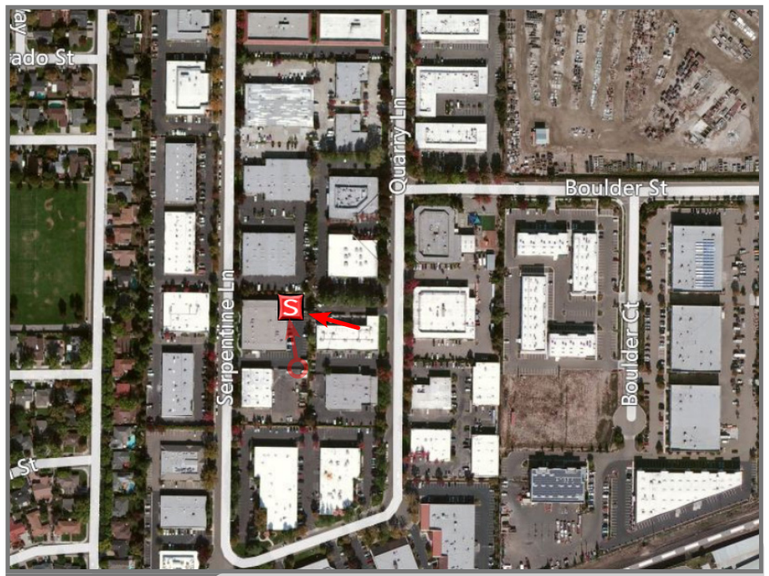

Location ©2013 Google Maps

Existing

Proposed Looking northwest from parking lot

Accuracy of photo simulation based upon information provided by project applicant.

CC4243

Quarry Lane

1056 Serpentine Lane Pleasanton CA 94566

AEsims.com
877.9AE.sims

View 2

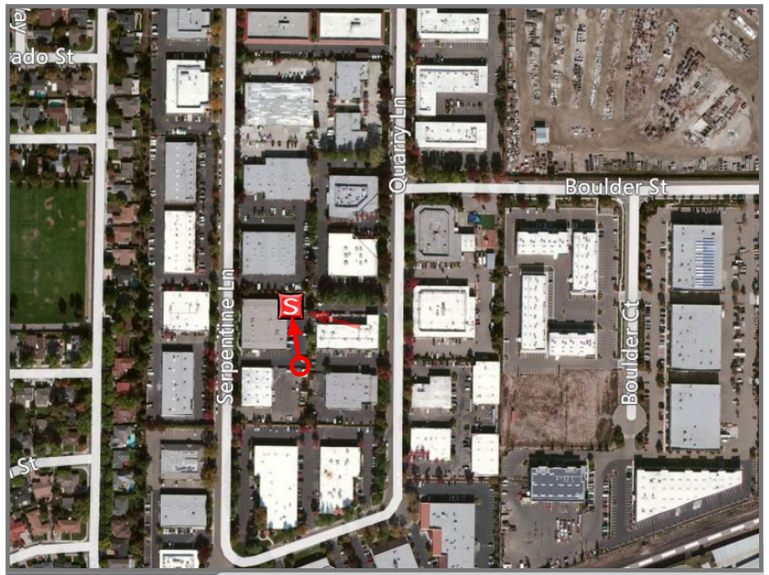

Location ©2013 Google Maps

Existing

Proposed Looking north from parking lot

Accuracy of photo simulation based upon information provided by project applicant.

CC4243

Quarry Lane

1056 Serpentine Lane Pleasanton CA 94566

AEsims.com
877.9AE.sims

View 3

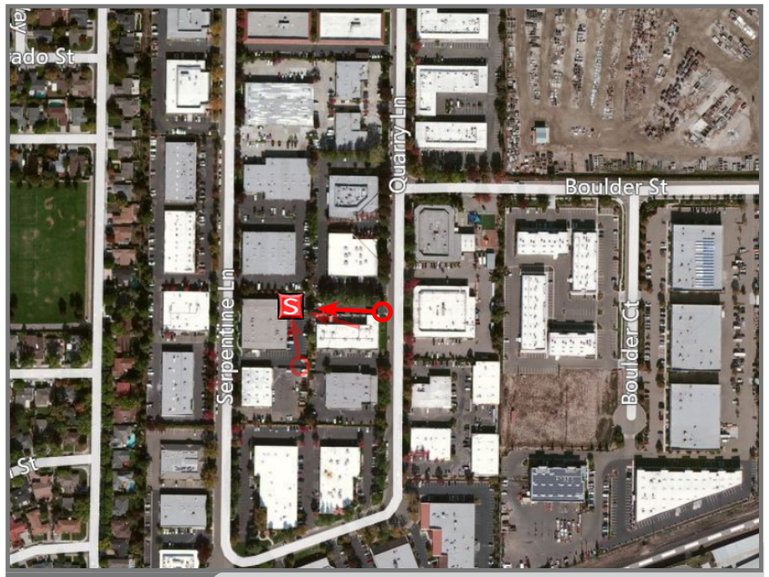

Location ©2013 Google Maps

Existing

Proposed Looking west from parking lot

Accuracy of photo simulation based upon information provided by project applicant.

CC4243
Quarry Lane

1056 Serpentine Lane Pleasanton CA 94566

AEsims.com
877.9AE.sims

View 4

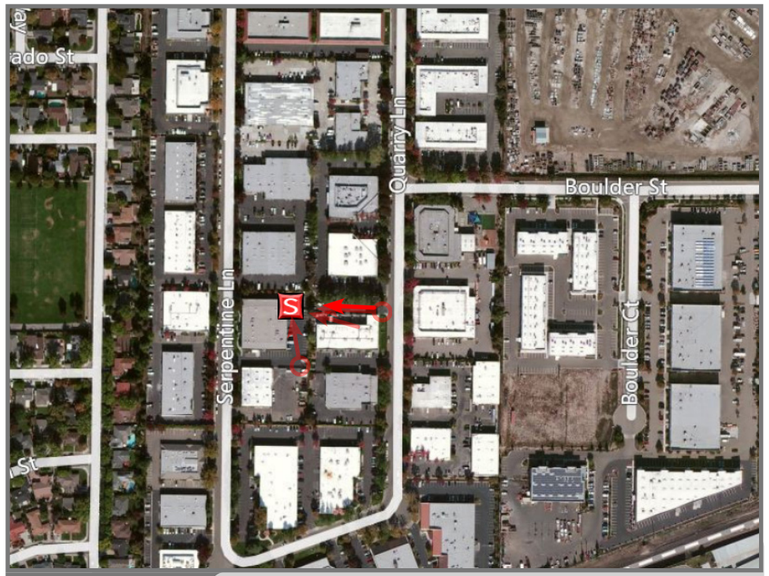

Location ©2013 Google Maps

Existing

Proposed Looking west from adjacent parking lot

Accuracy of photo simulation based upon information provided by project applicant.

CC4243 Permanent Site Propagation Map

June 28th 2012

Existing 850 Coverage

June 28, 2012

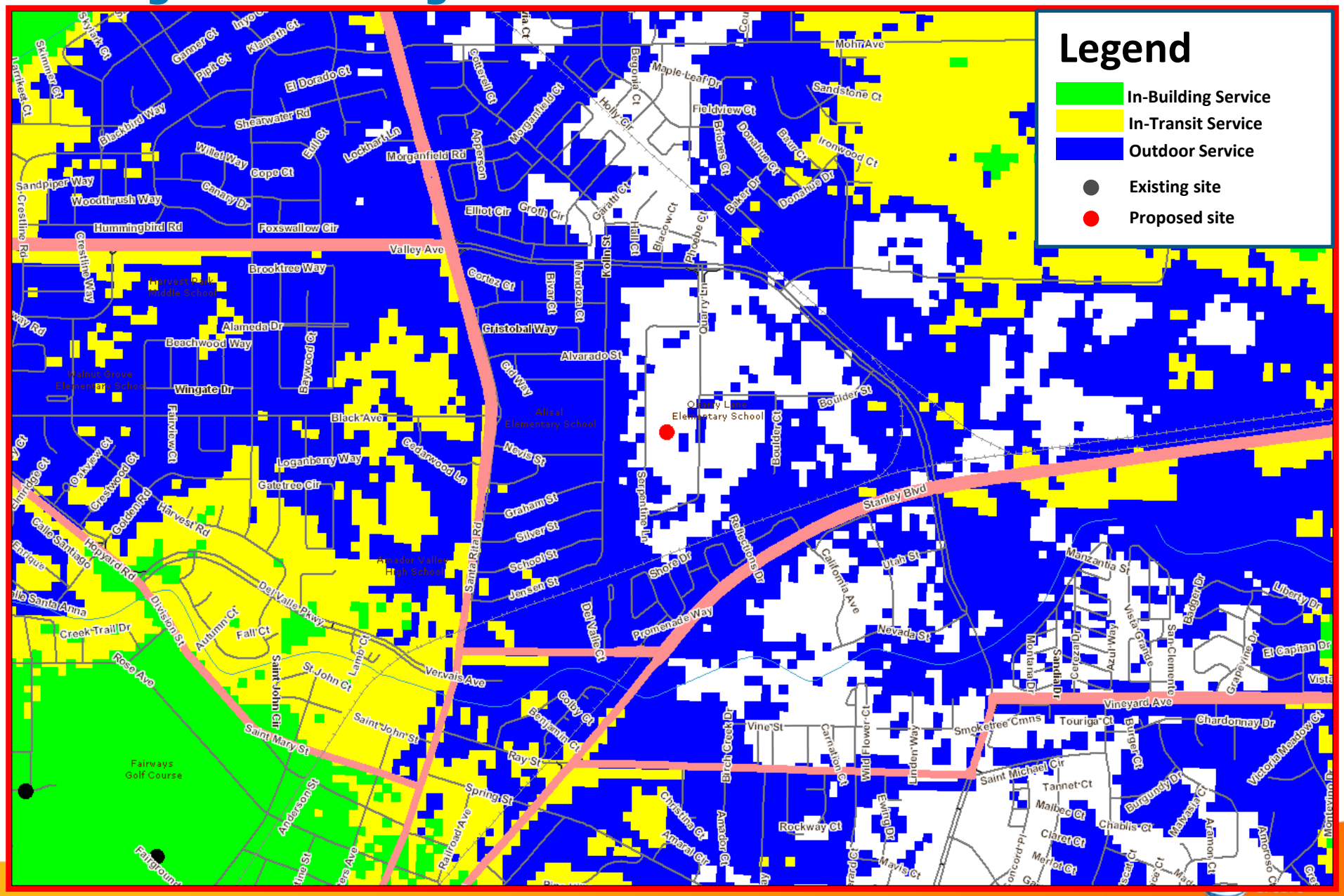

Proposed 850 Coverage – Serpentine Ln & Quarry Ln(44/52 ft)

June 28, 2012

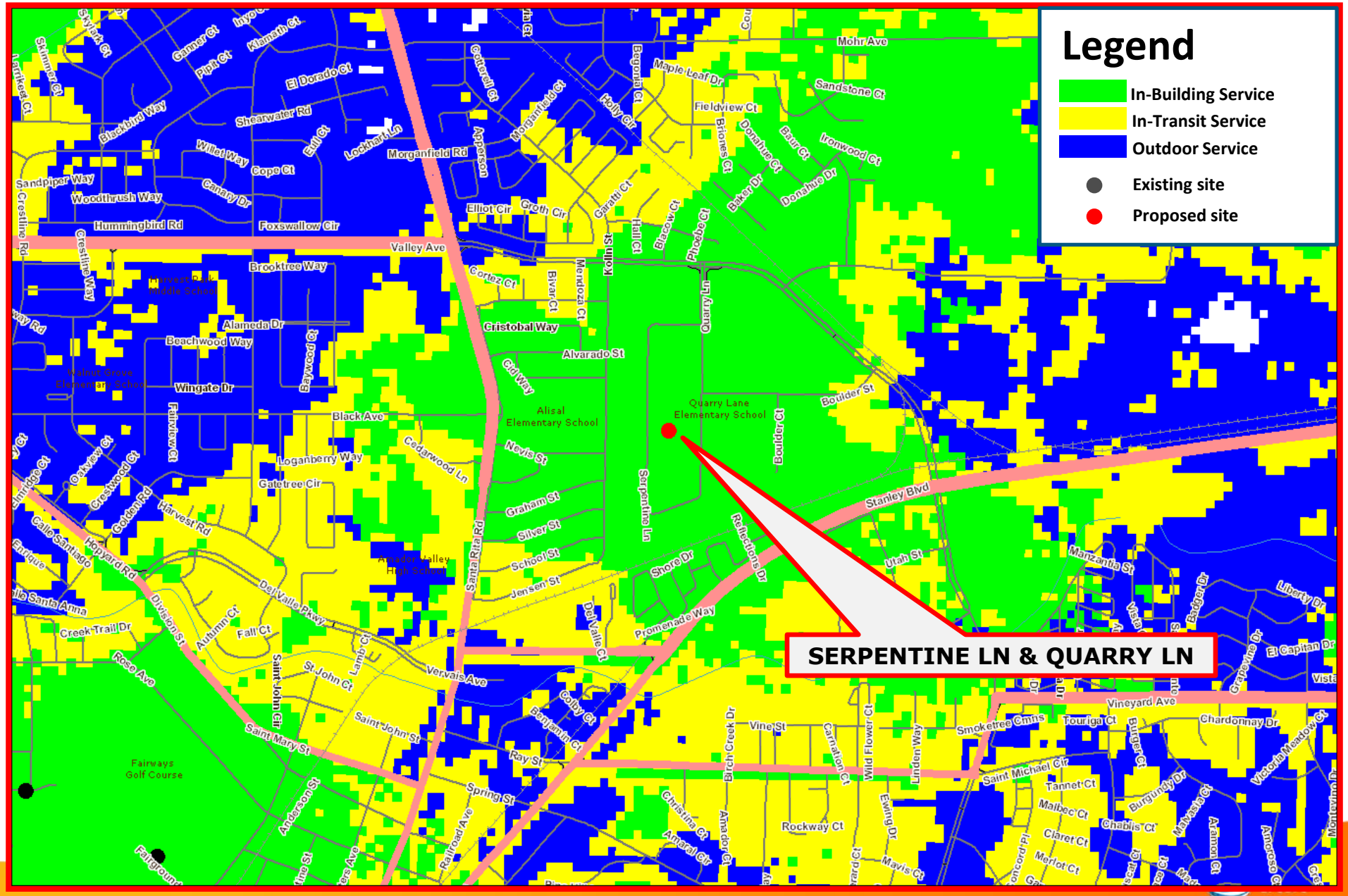

Existing surrounding sites

June 28, 2012

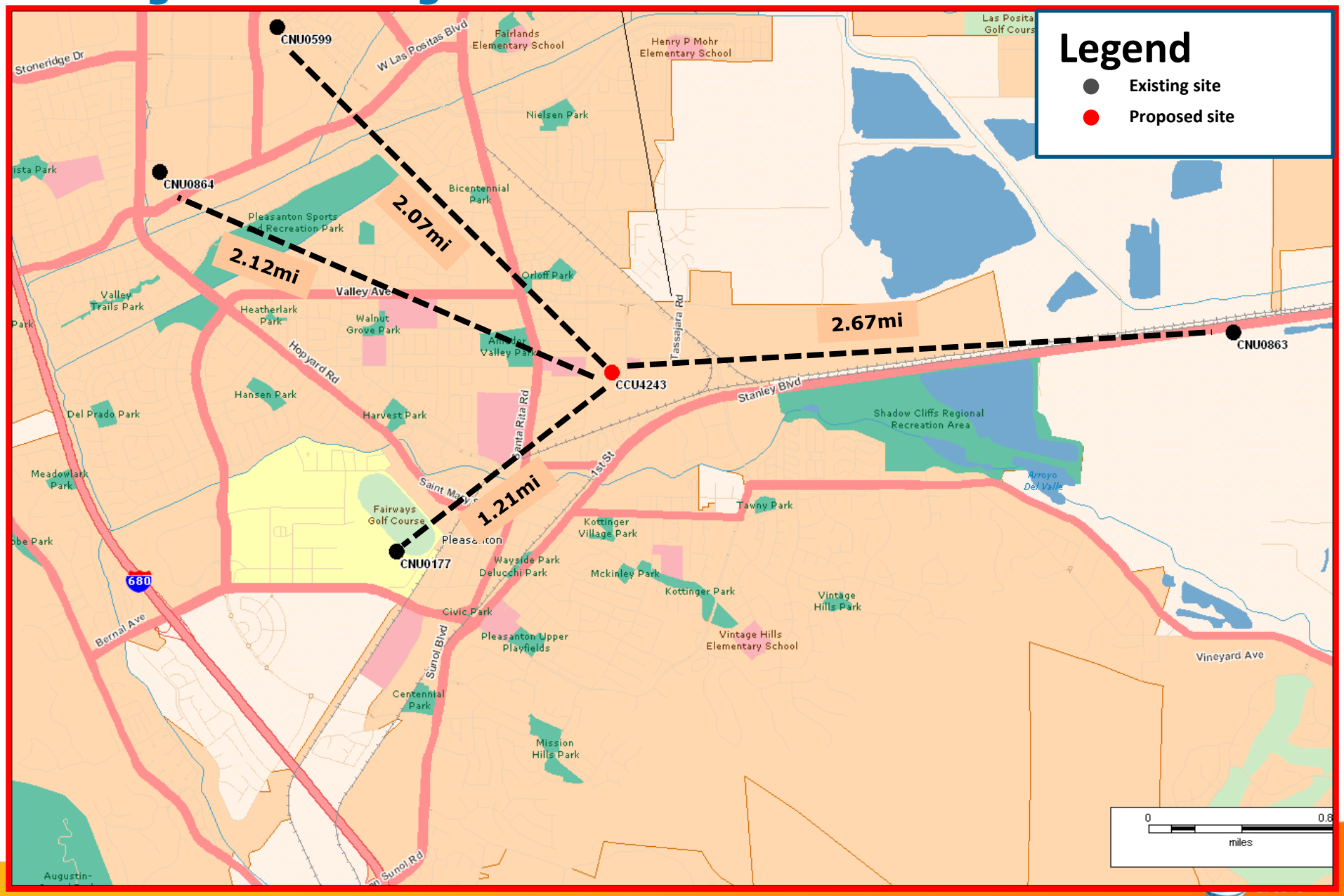

AT&T Mobility • Proposed Base Station (Site No. CC4243)
1056 Serpentine Lane • Pleasanton, California

Statement of Hammett & Edison, Inc., Consulting Engineers

The firm of Hammett & Edison, Inc., Consulting Engineers, has been retained on behalf of AT&T Mobility, a personal wireless telecommunications carrier, to evaluate the base station (Site No. CC4243) proposed to be located at 1056 Serpentine Lane in Pleasanton, California, for compliance with appropriate guidelines limiting human exposure to radio frequency ("RF") electromagnetic fields.

Executive Summary

AT&T proposes to install directional panel antennas on a tall steel pole, configured to resemble a pine tree, to be located at 1056 Serpentine Lane in Pleasanton. The proposed operation will comply with the FCC guidelines limiting public exposure to RF energy.

Prevailing Exposure Standards

The U.S. Congress requires that the Federal Communications Commission ("FCC") evaluate its actions for possible significant impact on the environment. A summary of the FCC's exposure limits is shown in Figure 1. These limits apply for continuous exposures and are intended to provide a prudent margin of safety for all persons, regardless of age, gender, size, or health. The most restrictive FCC limit for exposures of unlimited duration to radio frequency energy for several personal wireless services are as follows:

Wireless Service	Frequency Band	Occupational Limit	Public Limit
Microwave (Point-to-Point)	5,000–80,000 MHz	5.00 mW/cm^2	1.00 mW/cm^2
BRS (Broadband Radio)	2,600	5.00	1.00
AWS (Advanced Wireless)	2,100	5.00	1.00
PCS (Personal Communication)	1,950	5.00	1.00
Cellular	870	2.90	0.58
SMR (Specialized Mobile Radio)	855	2.85	0.57
700 MHz	700	2.40	0.48
[most restrictive frequency range]	30–300	1.00	0.20

General Facility Requirements

Base stations typically consist of two distinct parts: the electronic transceivers (also called "radios" or "channels") that are connected to the traditional wired telephone lines, and the passive antennas that send the wireless signals created by the radios out to be received by individual subscriber units. The transceivers are often located at ground level and are connected to the antennas by coaxial cables. A small antenna for reception of GPS signals is also required, mounted with a clear view of the sky. Because of the short wavelength of the frequencies assigned by the FCC for wireless services, the antennas require line-of-sight paths for their signals to propagate well and so are installed at some

height above ground. The antennas are designed to concentrate their energy toward the horizon, with very little energy wasted toward the sky or the ground. Along with the low power of such facilities, this means that it is generally not possible for exposure conditions to approach the maximum permissible exposure limits without being physically very near the antennas.

Computer Modeling Method

The FCC provides direction for determining compliance in its Office of Engineering and Technology Bulletin No. 65, "Evaluating Compliance with FCC-Specified Guidelines for Human Exposure to Radio Frequency Radiation," dated August 1997. Figure 2 attached describes the calculation methodologies, reflecting the facts that a directional antenna's radiation pattern is not fully formed at locations very close by (the "near-field" effect) and that at greater distances the power level from an energy source decreases with the square of the distance from it (the "inverse square law"). The conservative nature of this method for evaluating exposure conditions has been verified by numerous field tests.

Site and Facility Description

Based upon information provided by AT&T, including zoning drawings by Connell Design Group, LLC, dated July 25, 2012, it is proposed to install twelve Andrew Model SBNH-1D6565B directional panel antennas on a new 55-foot steel pole, configured to resemble a pine tree, to be installed at the southeast corner of the parking lot of the two-story commercial building located at 1056 Serpentine Lane in Pleasanton. The antennas would be mounted with up to 8° downtilt at effective heights of about 44 and 52 feet above ground and would be oriented in groups of four toward 20°T, 140°T, and 260°T, to provide service in all directions. The maximum effective radiated power in any direction would be 5,470 watts, representing simultaneous operation at 3,350 watts for PCS, 1,000 watts for cellular, and 1,120 watts for 700 MHz service. There are reported no other wireless telecommunications base stations at the site or nearby.

Study Results

For a person anywhere at ground, the maximum RF exposure level due to the proposed AT&T operation is calculated to be 0.014 mW/cm^2, which is 2.7% of the applicable public exposure limit. The maximum calculated level at the second-floor elevation of any nearby building would be 4.6% of the public exposure limit. The maximum calculated level at the second-floor elevation of any nearby residence* is 1.1% of the public exposure limit. It should be noted that these results include several "worst-case" assumptions and therefore are expected to overstate actual power density levels from the proposed operation.

* Located at least 500 feet away, based on photographs from Google Maps.

No Recommended Mitigation Measures

Due to their mounting locations, the AT&T antennas would not be accessible to the general public, and so no mitigation measures are necessary to comply with the FCC public exposure guidelines. It is presumed that AT&T will, as an FCC licensee, take adequate steps to ensure that its employees or contractors comply with FCC occupational exposure guidelines whenever work is required near the antennas themselves.

Conclusion

Based on the information and analysis above, it is the undersigned's professional opinion that operation of the base station proposed by AT&T Mobility at 1056 Serpentine Lane in Pleasanton, California, will comply with the prevailing standards for limiting public exposure to radio frequency energy and, therefore, will not for this reason cause a significant impact on the environment. The highest calculated level in publicly accessible areas is much less than the prevailing standards allow for exposures of unlimited duration. This finding is consistent with measurements of actual exposure conditions taken at other operating base stations.

Authorship

The undersigned author of this statement is a qualified Professional Engineer, holding California Registration Nos. E-13026 and M-20676, which expire on June 30, 2013. This work has been carried out under his direction, and all statements are true and correct of his own knowledge except, where noted, when data has been supplied by others, which data he believes to be correct.

William F. Hammett, P.E.
707/996-5200

August 16, 2012

FCC Radio Frequency Protection Guide

The U.S. Congress required (1996 Telecom Act) the Federal Communications Commission ("FCC") to adopt a nationwide human exposure standard to ensure that its licensees do not, cumulatively, have a significant impact on the environment. The FCC adopted the limits from Report No. 86, "Biological Effects and Exposure Criteria for Radiofrequency Electromagnetic Fields," published in 1986 by the Congressionally chartered National Council on Radiation Protection and Measurements ("NCRP"). Separate limits apply for occupational and public exposure conditions, with the latter limits generally five times more restrictive. The more recent standard, developed by the Institute of Electrical and Electronics Engineers and approved as American National Standard ANSI/IEEE C95.1-2006, "Safety Levels with Respect to Human Exposure to Radio Frequency Electromagnetic Fields, 3 kHz to 300 GHz," includes similar limits. These limits apply for continuous exposures from all sources and are intended to provide a prudent margin of safety for all persons, regardless of age, gender, size, or health.

As shown in the table and chart below, separate limits apply for occupational and public exposure conditions, with the latter limits (in *italics* and/or dashed) up to five times more restrictive:

Frequency	Electromagnetic Fields (f is frequency of emission in MHz)					
Applicable Range (MHz)	Electric Field Strength (V/m)		Magnetic Field Strength (A/m)		Equivalent Far-Field Power Density (mW/cm^2)	
0.3 – 1.34	614	*614*	1.63	*1.63*	100	*100*
1.34 – 3.0	614	*823.8/ f*	1.63	*2.19/ f*	100	*180/ f^2*
3.0 – 30	1842/ f	*823.8/ f*	4.89/ f	*2.19/ f*	900/ f^2	*180/ f^2*
30 – 300	61.4	*27.5*	0.163	*0.0729*	1.0	*0.2*
300 – 1,500	$3.54\sqrt{f}$	*$1.59\sqrt{f}$*	$\sqrt{f}/106$	*$\sqrt{f}/238$*	f/300	*f/1500*
1,500 – 100,000	137	*61.4*	0.364	*0.163*	5.0	*1.0*

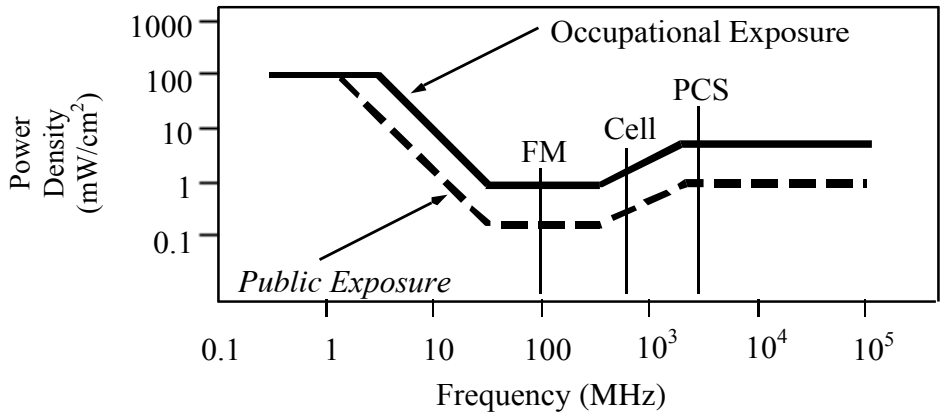

Higher levels are allowed for short periods of time, such that total exposure levels averaged over six or thirty minutes, for occupational or public settings, respectively, do not exceed the limits, and higher levels also are allowed for exposures to small areas, such that the spatially averaged levels do not exceed the limits. However, neither of these allowances is incorporated in the conservative calculation formulas in the FCC Office of Engineering and Technology Bulletin No. 65 (August 1997) for projecting field levels. Hammett & Edison has built those formulas into a proprietary program that calculates, at each location on an arbitrary rectangular grid, the total expected power density from any number of individual radio sources. The program allows for the description of buildings and uneven terrain, if required to obtain more accurate projections.

RFR.CALC™ Calculation Methodology

Assessment by Calculation of Compliance with FCC Exposure Guidelines

The U.S. Congress required (1996 Telecom Act) the Federal Communications Commission ("FCC") to adopt a nationwide human exposure standard to ensure that its licensees do not, cumulatively, have a significant impact on the environment. The maximum permissible exposure limits adopted by the FCC (see Figure 1) apply for continuous exposures from all sources and are intended to provide a prudent margin of safety for all persons, regardless of age, gender, size, or health. Higher levels are allowed for short periods of time, such that total exposure levels averaged over six or thirty minutes, for occupational or public settings, respectively, do not exceed the limits.

Near Field.

Prediction methods have been developed for the near field zone of panel (directional) and whip (omnidirectional) antennas, typical at wireless telecommunications base stations, as well as dish (aperture) antennas, typically used for microwave links. The antenna patterns are not fully formed in the near field at these antennas, and the FCC Office of Engineering and Technology Bulletin No. 65 (August 1997) gives suitable formulas for calculating power density within such zones.

For a panel or whip antenna, power density $S = \frac{180}{\theta_{BW}} \times \frac{0.1 \times P_{net}}{\pi \times D \times h}$, in mW/cm^2,

and for an aperture antenna, maximum power density $S_{max} = \frac{0.1 \times 16 \times \eta \times P_{net}}{\pi \times h^2}$, in mW/cm^2,

where θ_{BW} = half-power beamwidth of the antenna, in degrees, and
P_{net} = net power input to the antenna, in watts,
D = distance from antenna, in meters,
h = aperture height of the antenna, in meters, and
η = aperture efficiency (unitless, typically 0.5-0.8).

The factor of 0.1 in the numerators converts to the desired units of power density.

Far Field.

OET-65 gives this formula for calculating power density in the far field of an individual RF source:

$$\text{power density} \quad S = \frac{2.56 \times 1.64 \times 100 \times RFF^2 \times ERP}{4 \times \pi \times D^2}, \text{ in } mW/cm^2,$$

where ERP = total ERP (all polarizations), in kilowatts,
RFF = relative field factor at the direction to the actual point of calculation, and
D = distance from the center of radiation to the point of calculation, in meters.

The factor of 2.56 accounts for the increase in power density due to ground reflection, assuming a reflection coefficient of 1.6 (1.6 x 1.6 = 2.56). The factor of 1.64 is the gain of a half-wave dipole relative to an isotropic radiator. The factor of 100 in the numerator converts to the desired units of power density. This formula has been built into a proprietary program that calculates, at each location on an arbitrary rectangular grid, the total expected power density from any number of individual radiation sources. The program also allows for the description of uneven terrain in the vicinity, to obtain more accurate projections.

AT&T Mobility • Proposed Base Station (Site No. CCU4243)
1056 Serpentine Lane • Pleasanton, California

Statement of Hammett & Edison, Inc., Consulting Engineers

The firm of Hammett & Edison, Inc., Consulting Engineers, has been retained on behalf of AT&T Mobility, a personal telecommunications carrier, to evaluate its base station (Site No. CCU4243) proposed to be located at 1056 Serpentine Lane in Pleasanton, California, for compliance with appropriate guidelines limiting sound levels from the installation.

Executive Summary

AT&T proposes to install a new base station located at 1056 Serpentine Lane in Pleasanton. Noise levels from the proposed operation will comply with Pleasanton's limits.

Prevailing Standard

The City of Pleasanton sets forth limits on sound levels in Chapter 9 (Health and Safety), Section 4 (Noise Regulations) of its Municipal Code, including the following maximum outdoor noise levels by land use category, assessed at the nearest property line:

Originating Land Use	Maximum Level	Reference
Residential	60 dBA	§9.10.030
Commercial	70 dBA	§9.10.040
Industrial	75 dBA	§9.10.050

For public property, the maximum outdoor noise levels are as noted above, with an assessment location 25 feet from the noise source.

Figure 1 attached describes the calculation methodology used to determine applicable noise levels for evaluation against the prevailing standard.

General Facility Requirements

Wireless telecommunications facilities ("cell sites") typically consist of two distinct parts: the electronic base transceiver stations ("BTS" or "cabinets") that are connected to traditional wired telephone lines, and the antennas that send wireless signals created by the BTS out to be received by individual subscriber units. The BTS are often located outdoors at ground level and are connected to the antennas by coaxial cables. The BTS typically require environmental units to cool the electronics inside. Such cooling is often integrated into the BTS, although external air conditioning may be installed, especially when the BTS are housed within a larger enclosure.

Most cell sites have back-up battery power available, to run the base station for some number of hours in the event of a power outage. Many sites have back-up power generators installed, to run the station during an extended power outage.

Site & Facility Description

Based upon information provided by AT&T including drawings by Connell Design Group, LLC, dated January 9, 2013, that carrier proposes to install equipment cabinets on a raised steel platform above two parking spaces in the lot for the two-story office building located at 1056 Serpentine Lane in Pleasanton California. Six Purcell cabinets are to be installed, assumed for the purpose of this study to be Model FLX16WS, as well as two ComScope Model RBA72 cabinets. Several other cabinets are to be installed, including 18 Lucent Model RRU11; these are not cooled by fans and so do not generate noise. AT&T reports that no standby generator is to be installed; the drawings show a power connection, to facilitate placement of a temporary generator in the event of an extended commercial power outage. Proposed to be mounted on an adjacent 55-foot steel pole, configured to resemble a pine tree, are twelve directional panel antennas for the AT&T wireless operation, but this portion of the facilities do not generate acoustical energy. There are reported no other acoustical sources at or near the site.

The nearest property lines are to the north, at about 33 feet distant, and to the east, at about 62 feet distant.

Study Results

The equipment manufacturers report maximum sound pressure reference levels as follows:

Manufacturer	Reference Noise Level	Reference Distance
Purcell	64.7	5 ft
Commscope	58.7	5 ft

At the nearest property lines, the maximum calculated combined noise level for simultaneous operation of all the fans in all cabinets is 55.5 and 50.9 dBA to the north and east, respectively. Both figures are well below the most restrictive municipal limit of 60 dBA noise level.

Conclusion

Based on the information and analysis above, it is the undersigned's professional opinion that the AT&T Mobility base station proposed to be located at 1056 Serpentine Lane in Pleasanton, California, will comply with that city's standards limiting acoustic noise emission levels.

Authorship

The undersigned author of this statement is a qualified Professional Engineer, holding California Registration Nos. E-13026 and M-20676, which expire on June 30, 2015. This work has been carried out under his direction, and all statements are true and correct of his own knowledge except, where noted, when data has been supplied by others, which data he believes to be correct.

REGISTERED PROFESSIONAL ENGINEER
WILLIAM F. HAMMETT
E-13026
M-20676
Exp. 6-30-2015
ELECTRICAL
MECHANICAL
STATE OF CALIFORNIA

William F. Hammett, P.E.
707/996-5200

July 9, 2013

Noise Level Calculation Methodology

Most municipalities and other agencies specify noise limits in units of dBA, which is intended to mimic the reduced receptivity of the human ear to Sound Pressure ("L_P") at particularly low or high frequencies. This frequency-sensitive filter shape, shown in the graph to the right as defined in the International Electrotechnical Commission Standard No. 179, the American National Standards Institute Standard No. 5.1, and various other standards, is also incorporated into most calibrated field test equipment for measuring noise levels.

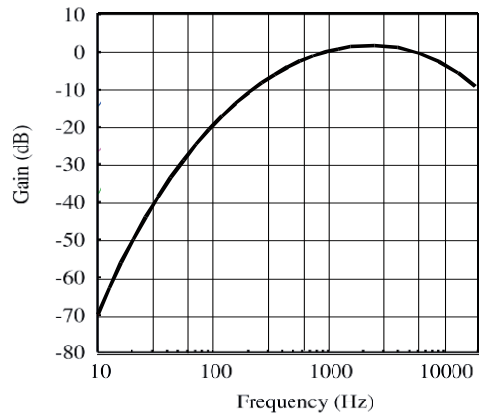

30 dBA	library
40 dBA	rural background
50 dBA	office space
60 dBA	conversation
70 dBA	car radio
80 dBA	traffic corner
90 dBA	lawnmower

The dBA units of measure are referenced to a pressure of 20 µPa (micropascals), which is the threshold of normal hearing. Although noise levels vary greatly by location and noise source, representative levels are shown in the box to the left.

Manufacturers of many types of equipment, such as air conditioners, generators, and telecommunications devices, often test their products in various configurations to determine the acoustical emissions at certain distances. This data, normally expressed in dBA at a known reference distance, can be used to determine the corresponding sound pressure level at any particular distance, such as at a nearby building or property line. The sound pressure drops as the square of the increase in distance, according to the formula:

$$L_P = L_K + 20 \log(D_K/D_P),$$

where L_P is the sound pressure level at distance D_p and L_K is the known sound pressure level at distance D_K.

Individual sound pressure levels at a particular point from several different noise sources cannot be combined directly in units of dBA. Rather, the units need to be converted to scalar sound intensity units in order to be added together, then converted back to decibel units, according to the formula:

where L_T is the total sound pressure level and L_1, L_2, etc are individual sound pressure levels.

$$L_T = 10 \log \left(10^{L_1/10} + 10^{L_2/10} + \ldots\right),$$

Certain equipment installations may include the placement of barriers and/or absorptive materials to reduce transmission of noise beyond the site. Noise Reduction Coefficients ("NRC") are published for many different materials, expressed as unitless power factors, with 0 being perfect reflection and 1 being perfect absorption. Unpainted concrete block, for instance, can have an NRC as high as 0.35. However, a barrier's effectiveness depends on its specific configuration, as well as the materials used and their surface treatment.